Certification Page
Regular and Emergency Rules

Revised June 2013

☐ Emergency Rules *(After completing all of Sections 1 and 2, proceed to Section 5 below)* ☐ Regular Rules

1. General Information

a. Agency/Board Name Department of Workforce Services - OSHA Division		
b. Agency/Board Address 1510 E. Perching Blvd - West Wing	c. City Cheyenne	d. Zip Code 82002
e. Name of Contact Person J.D. Danni	f. Contact Telephone Number 307-777-7700	
g. Contact Email Address jd.danni@wyo.gov	h. Adoption Date 12/06/13	
i. Program Wyoming Occupational Health and Safety Rules and Regulations for Oil & Gas Well Servicing		

2. Rule Type and Information: For each chapter listed, indicate if the rule is New, Amended, or Repealed.

If "New," provide the Enrolled Act numbers and years enacted:

c. Provide the Chapter Number, Short Title, and Rule Type of Each Chapter being Created/Amended/Repealed
(Please use the Additional Rule Information form for more than 10 chapters, and attach it to this certification)

Chapter Number:	Short Title:	New	Amended	Repealed
1	General	☐	☑	☐
2	Adoption and Extension of Established Rules and Regulations	☐	☑	☐
3	General Health and Safety Provisions	☐	☑	☐
4	Personal Protective Equipment	☐	☑	☐
5	Safeguards	☐	☑	☐
6	Equipment	☐	☑	☐
7	Special Operations	☐	☑	☐
8	Safety Procedures for Boilers, Air Compressors and Pressure Vessels	☐	☑	☐
9	Hydrogen Sulfide (H2S) Gas	☑	☐	☐
10	Acquisitions of Referenced Standards	☐	☑	☐

d. ☑ The Statement of Reasons is attached to this certification.

e. If applicable, describe the emergency which requires promulgation of these rules without providing notice or an opportunity for a public hearing:

3. State Government Notice of Intended Rulemaking

a. Date on which the Notice of Intent containing all of the information required by W.S. 16-3-103(a) was filed with the **Secretary of State**:	10/09/13
b. Date on which the Notice of Intent and proposed rules in strike and underscore format and a clean copy were provided to the **Legislative Service Office**:	10/11/13
c. Date on which the Notice of Intent and proposed rules in strike and underscore format and a clean copy were provided to the **Attorney General**:	10/11/13

4. Public Notice of Intended Rulemaking

a. Notice was mailed 45 days in advance to all persons who made a timely request for advance notice. ☑ Yes ☐ No ☐ N/A

b. A public hearing was held on the proposed rules. ☑ Yes ☐ No

If "Yes:"	Date:	Time:	City:	Location:
	12/06/13	9:00 AM	Casper, WY	Oil & Gas Conservation Commission Building 2211 King Blvd. Casper, Wyoming

5. Final Filing of Rules

a. Date on which the Certification Page with original signatures and final rules were sent to the **Attorney General's Office for the Governor's signature**:	12-11-13
b. Date on which final rules were sent to the **Legislative Service Office:**	12-11-13
c. Date on which a PDF of the final rules was electronically sent to the **Secretary of State**:	12-11-13

6. Agency/Board Certification

The undersigned certifies that the foregoing information is correct.

Signature of Authorized Individual *(Blue ink as per Rules on Rules, Section 7)*	David W Vaughan
Printed Name of Signatory	DAVID W. VAUGHAN
Signatory Title	WYO OHSA Commission Chairman
Date of Signature	12/11/13

7. Governor's Certification

I have reviewed these rules and determined that they:

1. Are within the scope of the statutory authority delegated to the adopting agency;
2. Appear to be within the scope of the legislative purpose of the statutory authority; and, if emergency rules,
3. Are necessary and that I concur in the finding that they are an emergency.

Therefore, I approve the same.

Governor's Signature	
Date of Signature	

Attorney General: 1. Statement of Reasons; 2. Original Certification Page; 3. Summary of Comments (regular rules); 4. Hard copy of rules: clean and strike/underscore; and 5. Memo to Governor documenting emergency (for emergency rules only).

LSO: 1. Statement of Reasons; 2. Copy of Certification Page; 3. Summary of Comments (regular rules); 4. Hard copy of rules: clean and strike/underscore; 5. Electronic copy of rules: clean and strike/underscore; and 6. Memo to Governor documenting emergency (for emergency rules only).

SOS: 1. PDF of clean copy of rules; and 2. Hard copy of Certification Page as delivered by the AG.

Statement of Reasons

The Department of Workforce Services – OSHA Division would like to update and amend the Occupational Health and Safety Rules and Regulations for Oil and Gas Well Servicing.

Amend and Updating the Occupational Health and Safety Rules and Regulations for Oil and Gas Well Servicing: This rulemaking action is to improve, streamline, and update the Wyoming OSHA Well Servicing Standards. Wyoming OSHA and the Oil and Gas Industry identified several requirements for better employee protection (e.g., flame resistant clothing, improved emergency communications, written hotwork permit, emergency decent devices, fall rescue plans, tugger line requirements, documented training, and minimum requirements for hydrogen sulfide). Plus several technical and grammatical errors were corrected. Wyoming OSHA believes that improving these standards will help employers to better understand their obligations and promote safety and health for their employees.

Summary of Comments for Proposed Well Servicing Rules

There were 2 written and oral comments from the Equality State Policy Center (ESPC) and the Wyoming Oil and Gas Industry Safety Alliance (WOGISA) supportive of all of the proposed Well Servicing Rules.

WOGISA polled their oil and gas employer members and the results indicated almost 87.9% of companies already have an existing policy to wear FRCs, almost 72.7% of members supported the mandatory FRC regulation, and almost 78.5% of the members agreed the proposed language of the rule fulfills their needs.

One written comment stating a proper personal protective equipment (PPE) assessment should be conducted for appropriate risk relating to Flame Resistant Clothing (FRCs). The Commission position is that the mandatory use of FRC's negates the need for a risk assessment.

In the negative comments, Basic Energy had a concern of the FRCs outer gear meeting the NFPA 2112 requirements. Commission members pointed out that there will be NFPA 2112 compliant outer gear available in the first or second quarter of 2014, which is before the rule will actually be enforced.

Key Energy requested clarification of the Commission on maintaining the FRCs for their employees. The company's concern centered around the fact that the vendor that sold the FRCs to them, and maintained the clothing, which they provided to their employees, would not maintain (ie launder) clothing that individual employees purchased and used for themselves. The Commission clarified the issue by stating that is was the responsibility of the company to insure its employees properly maintained their own FRCs if the employees were maintaining their own clothing. It was pointed out the company could inspect the clothing as it was worn on the job to insure compliance with the safety standards.

ESPC had requested limit silica exposure for employees. The Commission felt this would be accomplished better in the Specials Servicing Rules, which will be addressed in 2014.

OCCUPATIONAL HEALTH AND SAFETY
RULES AND REGULATIONS
OIL AND GAS WELL SERVICING

CHAPTER 1

GENERAL

Section 1. Authority, Purpose and Scope.

(a) The Occupational Health and Safety Commission is empowered by W.S. 27-11-105 to devise, formulate, adopt, amend and repeal rules and regulations governing the health and safety of employees and employers covered by the Act.

Section 2. Definitions.

(a) As used in these rules and regulations, unless the context clearly requires otherwise:

(i) "Act" means the State of Wyoming Occupational Health and Safety Act, as amended 1992.

(ii) "Administrator" means the Administrator of Department of Workforce Services – OSHA Division.

(iii) "ANSI" means American National Standards Institute.

(iv) "Approved" means sanctioned, endorsed, accredited, certified, or accepted by a duly constituted and recognized authority or agency.

(v) "ASTM" means American Society for Testing and Materials.

(vi) "ASME" means American Society of Mechanical Engineers.

(vii) "Authorized Person" means a person approved or assigned by the employer to perform a specific type of duty or duties or to be at a specific location or locations at the job site.

(viii) "Combustible liquid" means a liquid having a flashpoint at or above 100° F (37.8 ℃) (See "Flashpoint" Definition-(xx)). Combu stible liquids shall be divided into classes as follows:

(A) "Class II liquids" shall include those with flash-points at or above 100℉ (37.8 ℃) and be 140℉ (60 ℃), except any mixture having components with

flashpoints of 200℉ (93.3 ℃) or higher, the volum e of which make up 99 percent or more of the total volume of the mixture. Example: Stoddard Solvent, Fuel Oil No. 2.

(B) "Class III liquids" shall include those with flash-points at or above 140℉ (60℃) Class III liquids are subdivided into two su b-classes:

(I) "Class IIIA liquids" shall include those with flashpoints at or above 140℉ (60℃) and below 200° F (93.3 ℃), except any mixture having components with flashpoints of 200℉ (93.3℃) or higher, the total volume of which make up 99 percent or more of the total volume of the mixture. Example: Fuel Oil No. 6.

(II) "Class IIIB liquids" shall include those with flashpoints at or above 200℉ (93.3℃). Example: Ethylene Glycol (Anti-fre eze).

(1) When a combustible liquid is heated for use to within 30℉ (-1.1℃) of its flashpoint, it s hall be handled in accordance with the requirements for the next lower class of liquids.

(ix) “Commission” means the State of Wyoming Occupational Health and Safety Commission.

(x) “Competent Person” means one who is capable of identifying existing and predictable hazards in the surroundings or working conditions which are unsanitary, hazardous or dangerous to employees and who has authorization to take prompt corrective measures to eliminate them or who can recommend directly to persons in authority that such corrective measures be taken.

(xi) “Contractor” means any person or employer (see definition of person or employer) who contracts all or any part of oil and gas well servicing.

(xii) “Sub-Contractor” means any person or employer (see definition of person or employer) who contracts to perform any part of oil and gas well servicing from a contractor.

(xiii) “Defect” means any characteristic or condition which tends to weaken or reduce the strength of a tool, object or structure of which it is a part, beyond the recognized operating limitations of the tool, object or structure.

(xiv) “Department” means the Department of Workforce Services.

(xv) “Employee” means a person permitted to work by an employer in employment for wages, salary or commission.

(xvi) “Employer” means any individual or organization including the State and all political subdivisions which have in its employ one or more individuals performing services for it in employment.

(xvii) “Employment” means all services for pay under a contract for hire.

(xviii) “Established Federal Standard” means any operative standard established by *Public Law 91-596, the Williams-Steiger Act*, which applies to all business, including the Oil and Gas Well Servicing Industry, in effect on or before date of promulgation of these rules and regulations.

(xix) “Flammable Liquid” means any liquid having a flashpoint below 100℉ (37.8℃), except any mixture having component s with flash-points of 100℉ (37.8℃) or higher, the total of which make up 99 p ercent or more of the total volume of the mixture. Flammable liquids shall be known as Class I liquids. Class I liquids are divided into three classes as follows:

(A) Class IA shall include liquids having flashpoints below 73℉ (22.8℃) and having a boiling point below 100℉ (37 .8℃). Example: LPG.

(B) Class IB shall include liquids having flashpoints below 73℉ (22.8℃) and having a boiling point at or above 100 ℉ (37.8℃). Example: Acetone, Methyl Ethyl Ketone.

(C) Class IC shall include liquids having flashpoints at or above 73℉ (22.8℃) and below 100℉ (37.8℃). Example: Tu rpentine.

(xx) “Flashpoint” means the minimum temperature at which a liquid gives off vapor within a test vessel in sufficient concentration to form an ignitable mixture with air near the surface of the liquid and shall be determined as follows:

(A) For a liquid which has a viscosity of less than 45 SUS at 100℉ (37.8℃), does not contain suspended solids, and does not have a tendency to form a surface film while under test, the procedure specified in the *Standard Method of Test for Flashpoint by Tag Closed Tester (ASTM D-56-70) shall be used.*

(B) For a liquid which has a viscosity of 45 SUS or more at 100℉ (37.8℃), or contains suspended solids or has a tendency to form a surface film while under test, the Standard *Method of Test for Flashpoint by Pensky-Martens Closed Tester (ASTM D-93-71*) shall be used, except that the methods specified in *Note 1 to Section 1.1 of ASTM D-93-71* may be used for the respective materials specified in the Note.

(C) For a liquid that is a mixture of compounds that have different volatilities and flashpoints, its flashpoint shall be determined by using the procedure specified in paragraph (20)(A) or (B) of this section on the liquid in the form it

is shipped. If the flashpoint, as determined by this test, is 100°F (37.8°C) or higher, an additional flashpoint determination shall be run on a sample of the liquid evaporated to 90 percent of its original volume, and the lower value of the two tests shall be considered the flashpoint of the material.

(D) Organic peroxides, which undergo auto accelerating thermal decomposition, are excluded from any of the flashpoint determination methods specified in this subparagraph.

(xxi) "Full body harness" means straps which may be secured about a person in a manner that will distribute the fall arrest forces over at least the thighs, pelvis, waist, chest, and shoulder, with means for attaching it to other components of a personal fall arrest system.

(xxii) "Guarded" means covered, shielded, fenced, enclosed, or otherwise protected by means of suitable covers or casings, barrier rails, safety bars, or screens, to eliminate the possibility of accidental contact with, or dangerous approach by, persons or objects.

(xxiii) "Hazard" means any occupational condition or circumstance which is likely to cause death, injury or illness.

(xxiv) "Hazardous Substance" means a substance which, by reason of being explosive, flammable, poisonous, corrosive, oxidizing, irritating or otherwise harmful, is likely to cause occupational death, injury or illness.

(xxv) "Hospitalization" means admitted to the hospital for treatment for a period of twenty-four (24) hours or more.

(xxvi) "Incipient Stage Fire" means a fire which is in the initial or beginning stage and which can be controlled or extinguished by portable fire extinguishers.

(xxvii) "Lower Explosive Limit (LEL)" means the lower limit of flammability of gas or vapor at ordinary ambient temperatures expressed by a percentage of gas or vapor in air by volume. This limit is assumed constant for temperatures up to 250°F (120°C) above this; it should be decreased by a factor of 0.7, because explosibility increases with higher temperatures.

(xxviii)"Lower Explosive Limit (LEL) Monitor" means an instrument that measures the LEL of flammable gases.

(xxix) "Moving Parts" means gears, sprockets, revolving shafts, clutches, belts, pulleys, or other revolving or reciprocating parts that are attached to, or form an integral part of a machine.

(xxx) “National Consensus Standard” means any standard or modification thereof which:

(A) Has been adopted and promulgated by any nationally recognized standards-producing organization under procedures whereby it can be determined by the Secretary of Labor or by the Assistant Secretary of Labor that persons interested and affected by the scope or provisions of the standard have reached substantial agreement on its adoption;

(B) Was formulated in a manner which afforded an opportunity for diverse views to be considered; and

(C) Has been designated as such a standard by the Secretary or the Assistant Secretary, after consultation with other appropriate Federal agencies.

(xxxi) “Person” means an individual, governmental agency, partnership, association, corporation, business, trust, receiver, trustee, legal representative or successor to any of the foregoing.

(xxxii) “Personal fall arrest system” means a system used to arrest an employee in a fall from a working level. It consists of an anchorage, connectors, a body harness, and may include a lanyard, deceleration device, lifeline, or suitable combinations of these.

(xxxiii) “Place of Employment” means plant, premises, or any other place where directed by the employer or about which an employee is permitted to work.

(xxxiv) “Power Transmission” means equipment such as shafting, gears, belts, pulleys, or other parts used for transmitting power to the machine.

(xxxv) “Qualified” means one who by possession of a recognized degree, certificate, or professional standing, or who by extensive knowledge, training and experience has successfully demonstrated ability to solve or resolve problems relating to the subject matter, the work or the project.

(xxxvi) "Safety Factor” means the ratio of the ultimate breaking strength of a member or piece of material or equipment to the actual working stress .

(xxxvii) “Secretary” means the Secretary of the U.S. Department of Labor.

(A) May be referred to as the Assistant Secretary.

(xxxviii) “Shall” means mandatory.

(xxxix) “Should” means recommended.

(xl) “Standard” means a standard which requires conditions, or the adoption or use of one or more practices, means, methods, operations or processes reasonably necessary or appropriate to provide safe or healthful employment and places of employment in the Oil and Gas Well Servicing Industry.

(xli) “Suitable” means that which fits, and has the qualities or qualifications to meet a given purpose, occasion, condition, function or circumstance.

(xlii) “Suitable anchor” means that it is capable of supporting at least 5,000 pounds per employee attached or shall be designed, installed, and used as follows:

(A) as part of a complete personal fall arrest system which maintains a safety factor of at least two; and

(B) under the supervision of a qualified person.

(xliii) “Supervisor” means a person who has been given the control, direction or supervision of work performed by one or more employees.

(xliv) “Tugger line” means a wire rope powered by a winch and used for the controlled moving of light loads around a rig.

(xlv) “Variances” means exception to promulgated standards, rules and regulations. As stated in *W.S. 27-11-111--Variances, "Any person affected by this Act may request a variance to any standard, rule or regulation promulgated under this Act."*

(xlvi) “Well” means a hole in the ground:

(A) Made, or being made, by drilling, boring, or in any other manner, and from which oil or gas is obtained, or is obtainable; or is for the purpose of attempting to obtain oil or gas;

(B) Made or being made, by drilling or boring for the purpose of obtaining water to inject to an underground formation;

(C) used, drilled or being drilled for the purpose of injecting gas, air, water or other substance to an underground formation;

(D) Which is a test-hole, excluding seismic drilling; or

(E) Drilled, or being drilled, for any other purpose than listed above using equipment and machinery normally used for oil and gas well servicing.

(xlvii) “Well Operator” means an individual or organization that has the responsibility, management, and general control of an oil or gas well as lessee, sub-lessee, owner or assignee.

(xlviii) “Well servicing” means any action or work other than the original drilling of the well, related, but not limited to, the completion, recompletion, down hole maintenance, or termination of the well.

Section 3. **Petition for Promulgation, Amendment or Repeal of Rules and Regulations.**

Any interested person may petition, in writing, the Department or Commission requesting the promulgation, amendment or repeal of any rules and regulations and may accompany his petition with relevant data, views and arguments. The Department or Commission may prescribe by rule the form of such petition and the procedure for their [its] submission, consideration and disposition. Upon submission of such a petition, the Commission, as soon as practicable, either shall deny the petition in writing (stating its reason for the denial) or initiate rule-making proceedings in accordance with 16-3-103, Wyoming Statutes. The action of the Commission in denying a petition shall be final and not subject to review.

Section 4. **Amendments of Rules and Regulations.**

(a) The Commission shall have the authority under W.S. 27-11-105(b)(ii), to devise, formulate, adopt, amend and repeal rules and regulations promulgated under the Act.

(b) In the event of conflict among any such standards, the Commission shall take the action necessary to eliminate the conflict, including the amendment or revocation of a rule or regulation, so as to assure the greatest protection of the health and safety of the employees and employers affected by the Act.

Section 5. **Applicability of Rules and Regulations.**

(a) These rules and regulations as well as the requirements contained in the State of Wyoming *Occupational Health and Safety 1910-General Rules and Regulations* and those parts of *1926-Construction,* or 29 CFR 1910 and 29 CFR 1926, if applicable, which apply to site clearing, rig erection and rig dismantling shall apply to all businesses and industries, employers and employees on the job site.

(b) If a particular requirement contained herein is specifically applicable to a condition, practice, means, method, operation or process it shall prevail over any different general rule or regulation which might otherwise be applicable to the same condition, practice, means, method, operation or process.

NOTE: It has been determined by the Wyoming Occupational Health and Safety Commission that a servicing unit which is performing drilling operations is subject to the Wyoming Occupational Health and Safety Rules and Regulations for Oil and Gas Well Drilling.

Section 6. **Incorporation by Reference.**

(a) The standards, rules and regulations of the U.S. Government, National Fire Protection Association, American National Standards Institute and other organizations which are not agencies of the State of Wyoming which are legally incorporated by reference in these rules and regulations shall have the same force and effect as these rules and regulations for Oil and Gas Well Servicing.

(b) Copies of the standards, rules and regulations which are incorporated by reference may be examined at the office of, Department of Workforce Services – OSHA Division, in Cheyenne, Wyoming. Copies of such private standards, rules or regulations may be obtained from the issuing organizations. Their names and addresses are listed in these rules and regulations.

(c) Any changes in the standards, rules or regulations incorporated by reference in these rules and regulations and an official historic file of such changes are available for inspection at the office of, Department of Workforce Services – OSHA Division, in Cheyenne, Wyoming.

CHAPTER 2

ADOPTION AND EXTENSION OF ESTABLISHED RULES AND REGULATIONS

Section 1. **Scope and Purpose**.

The Commission shall devise, formulate, adopt, amend and repeal rules and regulations as provided by the Act as deemed necessary and advisable for the protection of every employer, employee and employment in the Oil and Gas Well Servicing Industry.

Section 2. **Effective Dates**.

These rules and regulations and any changes to standards, rules and regulations become effective upon their filing with the Wyoming Secretary of State, in accordance with Wyoming statutes pertaining to rulemaking procedure.

CHAPTER 3

GENERAL HEALTH AND SAFETY PROVISIONS

Section 1. General Rules for Well Operators, Employers, Employees, Contractors and Sub-Contractors.

(a) Each well operator, employer, employee, contractor and subcontractor shall be charged with the responsibilities and duties as required by the Act, the Rules of Practice a Procedure, the Rules and Regulations (General), the Rules and Regulations for Construction, and these rules and regulations as they relate to the machinery, tools, materials or equipment and to the employees of each of them as applicable.

NOTE: It has been determined by the Wyoming Occupational Health and Safety Commission that a servicing unit which is performing drilling operations is subject to the Wyoming Occupational Health and Safety Rules and Regulations for Oil and Gas Well Drilling.

(b) Accident prevention responsibilities:

(i) It shall be the responsibility of the employer to initiate and maintain such programs as may be necessary to comply with these rules and regulations.

(ii) Such programs shall provide for inspections of the establishment, materials and equipment. These inspections shall be performed by competent persons designated by the employer.

(iii) The employer shall prohibit the use of any machinery, tool, material or equipment which he knows, or reasonably should know, is not in compliance with any applicable requirement of these rules and regulations. Such machine, tool, material or equipment shall either be identified as unsafe by locking the controls to render them inoperable or shall be physically removed from its place of operation.

(iv) The employer shall permit only authorized persons, or employees being trained under the supervision of a qualified person(s), to operate equipment or machinery.

(c) No employer for any part of the operation covered by these rules and regulations shall require any employee to work in surroundings or under working conditions which are unsanitary, hazardous, or dangerous to his health or safety, beyond the normal hazards inherent in his job.

(d) Any two or more employers who have employees at one jobsite (such as prime contractors and sub-contractors) may make their own arrangements with respect to obligations which might be more appropriately treated on a job site basis rather than

individually. Thus, for example, the prime contractor and his sub-contractors may wish to make an agreement that the prime contractor or one of the sub-contractors will provide all required first-aid or toilet facilities, thus relieving the sub-contractors from the actual, but not from the legal responsibility (or, as the case may be, relieving the other subcontractors from this responsibility.)

(e) The well operator shall be responsible for furnishing the general and specific well prognosis and plans, and will provide contractor and employers with all available information concerning observed pressure conditions, hazardous fluids, and well conditions which may be encountered in the servicing operations to the best of the well operator's knowledge.

(f) No person shall cause the servicing work to commence until the contractor or sub-contractor, as appropriate, has declared his equipment and employees are safely prepared to proceed.

(g) No person shall require any modifications to be made or cause auxiliary equipment to be installed which are in conflict with these rules and regulations.

Section 2. **Safety Training and Education**.

(a) Education and training of employees in the recognition, avoidance and prevention of unsafe conditions in employments covered by these rules and regulations shall be given.

(b) Each employee shall be instructed in the recognition and avoidance of unsafe conditions and the rules and regulations applicable to his work environment to control or eliminate any occupational hazards or other exposure to illness or injury.

(c) Employees required to handle or use poisons, corrosives and other harmful substances shall be instructed regarding the safe handling and use, and be made aware of the potential hazards, personal hygiene and personal protective measures required.

(d) In job site areas where harmful plant or animals are present, employees who may be exposed shall be instructed regarding the potential hazards, how to avoid injury, and the first aid procedures to be used in the event of injury or illness.

(e) Employees required to handle or use flammable liquids, gases or toxic materials shall be instructed in the safe handling and use of these materials and made aware of the specific requirements contained in *Subpart G and Subpart H and other applicable subparts of the State of Wyoming Occupational Health and Safety 1910-General Rules and Regulations, or 29 CFR 1910 Subpart G and H and other applicable subparts, if applicable.*

(f) All employees required to enter into confined or enclosed spaces shall be instructed as to the nature of the hazards involved, the necessary precautions to be taken, and in the use of protective and emergency equipment required. The employer shall comply with any specific regulations that apply to work in dangerous or potentially dangerous areas.

(g) For purpose of this paragraph, “confined or enclosed space" means any space having a limited means of egress, which is subject to the accumulation of toxic or flammable contaminants or has an oxygen deficient atmosphere. Confined or enclosed spaces include, but are not limited to, storage tanks, process vessels, bins, boilers, ventilation or exhaust ducts, sewers, underground utility vaults, tunnels, pipelines and open top spaces more than four (4) feet in depth such as pits, tubs, vaults and vessels.

(h) All training required by these rules and regulations shall be documented.

Section 3. **Acceptable Inspections.**

(a) Pressure vessels. Valid inspection by an insurance company or regulatory authority shall be deemed as acceptable evidence of safe installation, inspection and testing of pressure vessels provided by the employer.

(b) Boilers. Boilers provided by the employer shall be deemed to be in compliance with these requirements when evidence of current and valid certification by an insurance company or regulatory authority attesting to the safe installation, inspect on and testing is presented.

(c) Other requirements. Regulations prescribing specific requirements for other types of pressure vessels and similar equipment are contained *in Subpart M of the State of Wyoming Occupational Health and Safety 1910-General Rules and Regulations, or 29 CFR 1910 Subpart M, if applicable.*

CHAPTER 4

PERSONAL PROTECTIVE EQUIPMENT

Section 1. Head Protection.

(a) An approved helmet (safety hard hat) shall be required to be worn by all employees within working areas with the exception of self-contained areas such as truck cabs and field offices.

(b) An approved helmet (safety hard hat), meeting the requirements and specifications of the *American National Standard Safety Requirements for Industrial Head Protection, ANSI Z89.1-Current Edition*, shall be required to be worn by all employees at any time there is danger of being struck by falling objects, or when required to be worn by other applicable rules and regulations.

Section 2. Eye and Face Protection.

(a) Protective eye and face equipment shall be required where there is a potential of injury that can be prevented by such equipment. In such cases, employers shall require the use of a type of protector suitable for the work to be performed. No unprotected person shall knowingly be subjected to a hazardous environmental condition. Suitable eye protectors shall be required by the employer where machines or operations present the hazard of flying objects, glare, liquids, injurious radiation or a combination of these hazards.

(b) Protectors shall meet the following minimum requirements:

(i) They shall provide protection against the particular hazards for which they are designed.

(A) Safety glasses shall be the wrap around type or with side shields.

(ii) They shall be reasonably comfortable when worn under the designated conditions.

(iii) They shall fit snugly and shall not unduly interfere with the movements of the wearer.

(iv) They shall be durable.

(v) They shall be capable of being disinfected.

(vi) They shall be easily cleanable.

(vii) Protectors shall be kept clean and in good repair.

(c) Employees whose vision requires the use of corrective lenses in spectacles, and who are required by these rules and regulations to wear eye protection, shall be required to wear goggles or spectacles of one of the following types:

(i) Spectacles whose protective lenses provide optical correction.

(ii) Goggles that can be worn over corrective spectacles without disturbing the adjustment of the spectacles.

(iii) Goggles that incorporate corrective lenses mounted behind the protective lenses.

(d) Every protector shall be distinctly marked to facilitate identification of the manufacturer.

(e) When limitations or precautions are indicated by the manufacturer, they shall be transmitted to the user and care taken to see that such limitations and precautions are strictly observed.

(f) Design, construction, testing and use of devices for eye and face protection shall be in accordance with *American National Standard for Occupational and Educational Eye and Face Protection, Z87.1-Current Edition.*

Section 3. Occupational Foot Protection.

(a) Safety shoes or safety boots shall be required to be worn in the working area.

(b) Metatarsal guards should be required as additional protection where the danger of a crushing injury to the arch of the foot exists.

(c) Safety-toe footwear for employees shall meet the requirements and specifications in *American Society for Testing and Materials (ASTM) F-2412-Current Edition "Standard Test Methods for Foot Protection," and ASTM F-2413-Current Edition, "Standard Specification for Performance Requirements for Protective Footwear*,".

Section 4. General.

(a) Unreasonable loose, poorly fitted or torn clothing shall not be worn.

(b) Clothing which has been saturated with flammable or toxic substances shall be immediately removed, and the affected skin area thoroughly washed.

(c) Hazardous jewelry, such as finger rings, chain bracelets, etc., shall not be worn. This is not intended to include wristwatches equipped with bands which will easily break.

(d) Hair of such length that it may become entangle in moving or rotating machinery shall be contained in a suitable manner. Beards and sideburns of employees shall be kept in such condition and of such length so as not to interfere with the proper and efficient use of gas masks, air masks or other safety apparel or equipment.

(e) Where these rules and regulations prescribe the use of body harnesses:

(i) An approved full body harness, provided by the employer, suitable for the particular job or hazard exposure, shall be worn and shall be attached by means of a personal fall arrest system to a suitable anchor and adjusted to allow a minimum drop. Every person, when engaged in work at four (4) feet or more above the derrick floor or other working surfaces, shall wear a body harness with an attached safety line secured to a suitable anchor (when it is feasible and does not create a greater hazard).

(ii) A separate life line shall be provided for each employee exposed to the particular job or hazard.

(iii) Personal fall arrest system components (i.e.: anchorage, connectors, full body harness, etc.) shall be inspected prior to each use and shall be repaired or replaced if found to be defective.

(f) Flame Resistant Clothing (FRC) shall be worn by all employees on the well servicing site location within 120 feet of the well or well bore once the well bore is open, with the exception of self-contained areas (such as truck cabs and field offices) and employees changing into or out of the FRC garments.

(i) Flame Resistant Clothing (FRC) for employees shall meet the requirements and specifications of NFPA 2112 Standard on Flame-Resistant Garments for Protection of Industrial Personnel Against Flash Fire, Current Edition, and NFPA 2113 Standard on Selection, Care, Use, and Maintenance of Flame-Resistant Garments for Protection of Industrial Personnel Against Flash Fire, Current Edition.

(ii) A sign shall be conspicuously displayed at the beginning of all entrances to the well locations stating “Flame Resistant Clothing (FRC) is required to be worn”.

(g) Special protective wearing apparel shall be provided and worn as deemed necessary because of an unusually hazardous situation not normal to the job.

Section 5. Emergency Equipment.

(a) The well operator shall advise the servicing organization of any area which has or may contain insufficient oxygen or has been or may be contaminated by flammable or toxic gases, vapors or dust. The employer shall ensure that servicing is not performed until sufficient tests have been made with appropriate instruments or equipment to determine extent of hazard. If a hazard exists the area must be purged to reduce the hazard to an allowable concentration, or all employees shall be provided with proper protective equipment.

(i) In the event of the presence of Hydrogen Sulfide (H_2S) the following limits of exposure shall apply:

(A) Ceiling value = 10 ppm.

(B) Time weighted average (TWA) = 10 ppm

(C) Acceptable maximum peak above the acceptable ceiling concentration for an eight (8) hour shift = 50 ppm. (10 minutes once only if no other measurable exposure occurs.)

(ii) Self-contained breathing equipment especially designed for use in H_2S shall be available on location for each essential personnel, when working in a known or suspected H_2S environment.

(iii) Equipment to purge area shall be available on location, in position to be used during the period the well is being worked on or as long as there is a possibility of escape of gas in amounts to be harmful.

(iv) Blower used for ventilation shall be a non-sparking type.

(b) In the case of toxic atmosphere or lack of oxygen, any employee entering such area shall be required to use the proper respiratory equipment.

(c) In addition, any employee entering such atmospheres as specified in 5(b) of this section, shall be required to wear a body harness with attached life line for emergency retrieval. An employee shall be stationed outside the hazard area with the proper rescue equipment to assist in case of emergency, and to attend to the retrieval of the life line.

(d) Canister-type filter masks shall be used only in an area where sufficient oxygen exists (at least nineteen and one half (19.5) percent by volume).

(i) Canister-type filter masks shall be used only in areas where their capabilities will not be exceeded. Such canisters shall be approved for the hazardous contaminant.

(e) In those atmospheres where tests indicate oxygen content is less than that necessary to sustain life (nineteen and one half (19.5) percent oxygen by volume), employees shall be provided with and required to use self-contained breathing apparatus (SCBA); or

(f) Supplied-air breathing apparatus may be used instead of SCBA in Section 5(e). In the event SCBAs are used, they shall be selected, used and maintained in accordance with *1910.134 - Respiratory Protection, of the Wyoming Occupational Health and Safety 1910-General Rules, or 29 CFR 1910.134 – Respiratory Protection, if applicable.*

(g) All respirators on work locations shall be:

(i) Housed in a proper cabinet or other appropriate container located close to, but not within, the potential area of use;

(ii) Inspected at least monthly and documented for constant service readiness; except, if rented, prior to each use, but at least monthly.

Note: Caution should be observed when using SCBA at low temperatures due to pressure drop.

(iii) Serviced and brought back to readiness after each usage.

(h) All employees shall be trained in the use and operation of employer provided breathing equipment available on the job and employees whose facial contours, physical impairments, hair or beard styles that would interfere with the seal necessary for respiratory protective devices, shall not enter areas in which such protection devices may be necessary.

(i) The well operator, prior to commencement of work in an area, shall provide provisions for contacting emergency medical services in case of serious injury.

(i) No servicing unit shall be rigged up on a work site until the emergency medical service communications has been established and tested.

(ii) A poster shall be fastened at or near emergency communications devices plainly stating the phone numbers of emergency medical services within the district of the work site.

(j) A first aid kit (not less than twenty-four (24) unit type) shall be maintained at the servicing site and inspected at frequent intervals. The first aid kit shall be replenished after each major usage and shall be kept in a sanitary and usable condition.

(i) First aid station(s) shall be located as close as practicable to the highest concentration of personnel.

(ii) First aid stations shall be well marked and available to personnel during all working hours.

(iii) One person holding a valid first aid certificate shall be responsible for the proper use and maintenance of the first-aid stations(s).

(iv) A "unit" is defined as a package, bottle or other container which contains a specific item of first-aid material. For example, a bottle of hydrogen peroxide, a box of adhesive bandages, a box with a roll of gauze bandage, etc.

(v) In addition to the first-aid kit which must be kept on the equipment or at the place of work, there shall be available within the closest practicable distance from the operations (not to exceed five (5) minutes) the following items:

(A) Two (2) adjustable medical splints; one (1) arm, one (1) leg;

(B) Two (2) all wool blankets or blankets equal in strength and fire resistance.

(k) One (1) or more employees on each servicing unit shall be adequately trained to render first aid and cardiopulmonary resuscitation (CPR), and shall have a valid certificate from the American Red Cross or equivalent training that can be verified by documentary evidence and who will always be present.

(l) Where the eyes or body of personnel may be exposed to injurious materials, eyewash equipment for emergency use shall be provided. For information on emergency eyewash and shower equipment see, *American National Standard Institute (ANSI) Z358.1-Current Edition.*

Section 6. Fire Prevention and Protection.

(a) Firefighting equipment shall not be tampered with and shall not be removed for other than the intended purpose.

(b) Fire extinguishers and other firefighting equipment shall be suitable located and plainly labeled as to their type and method of operation.

(c) Combustible waste material and residues shall be kept to a minimum, stored in covered metal receptacles and disposed of daily.

(d) Access to exits or fire extinguishers shall not be blocked or obscured by clothing, materials or equipment.

(e) Portable extinguishers shall be maintained in a fully charged and operable condition, and kept in their designated places at all times when they are not being used.

(f) All fire extinguishers shall be maintained, inspected, and hydrostatically tested in accordance with *1910.157 of the Wyoming Occupational Health and Safety 1910-General Rules, or of 29 CFR 1910.157, if applicable.*

(g) Every well servicing unit shall have four (4) non-freeze type twenty (20) pound B:C (or equivalent) rated fire extinguishers, approved by a nationally recognized testing laboratory. The above is minimum and many occasions may warrant more equipment of a larger scale.

(i) All servicing unit crew at the rig site will be trained in the proper use of a multi-purpose fire extinguisher annually to control or extinguish incipient stage fires.

(h) Carbon tetrachloride extinguishers are not permitted.

(i) Every welding operation shall have a suitable extinguisher available.

(j) Extreme caution shall be used with open flames around oil and gas operations.

(k) Natural or liquefied petroleum gas (LPG) shall not be used to operate spray guns or other pneumatic equipment.

(l) There shall be no smoking on location within 120 feet of well bore or any other flammable substances. All persons shall leave all smoking materials, such as cigarettes, cigars, pipes, matches, and lighters in their vehicles or change rooms, so as to prevent anyone from inadvertently smoking on location. Any engine being refueled shall be shut off during refueling.

(m) There shall be a least two (2) "No Smoking" signs conspicuously displayed at each well location while there is well service work in progress. Signs shall be constructed in accordance with *1910.145, Wyoming Occupational Health and Safety 1910-General Rules and Regulations, or 29 CFR 1910.145, if applicable.*

(n) Grinding, welding, cutting, and brazing or open flame within 120 feet of the well or well bore shall require a written hot work permit in accordance with Chapter 5 section 11. Grinding, welding, cutting, and brazing more than 120 feet from the well or well bore shall be conducted in accordance with *1910.252(d) of the Wyoming Occupational Health and Safety 1910-General Rules and Regulations, or 29 CFR 1910.252(d), if applicable.*

Section 7. Flammable Liquid Handling and Storage. (Flashpoint Less 100℉)

(a) Only approved containers or approved safety containers shall be used as containers of flammable liquids having a flashpoint lower than 100℉, such as gasoline, naphtha, etc.

(b) Liquefied Petroleum Gas (LPG) shall be handled in accordance with *Subpart H, Wyoming Occupational Health and Safety 1910-General Rules and Regulations*, in all operations.

(c) An electrical bond shall be maintained between containers when a flammable liquid is being transferred from one to the other.

(d) Discharge nozzles and valves shall be of the quick, self-closing type.

(e) Open flames or grinding, welding, cutting, and brazing within 120 feet of a flammable material storage area shall require a written hot work permit in accordance with Chapter 5, Section 11(a). Open flames or grinding, welding, cutting and brazing more than 120 feet from a flammable storage area shall be performed in compliance with *Subpart Q of the State of Wyoming Occupational Health and Safety 1910 - General Rules and Regulations, or 29 CFR 1910 Subpart Q, if applicable*.

(f) Proper signs shall adequately designate all flammable storage areas. Signs shall be constructed in accordance with 1910.145, *Wyoming Occupational Health and Safety 1910-General Rules and Regulations, or 29 CFR 1910.145, if applicable.*

CHAPTER 5

SAFEGUARDS

Section 1. Working Conditions.

(a) All wells shall be reasonably controlled to the extent that they do not present a fire hazard or an undue health or injury hazard to the employee. Work on or near a well that is expelling gas, oil, water or combination thereof shall be minimized and then only after all reasonable safety precautions are taken.

(b) The well operator shall be responsible for the overall control of the well. All reasonable methods of well control shall be employed.

(c) The well operator shall ensure that the employer is advised of any known potential hazard.

(d) In the event of a sudden, unexpected expulsion of flammable or toxic material, the work on the well shall be halted and the location and equipment cleaned or purged and made safe before work is continued. Other than that required to bring the well under control, there shall be no rod and tubing work performed on wells that are flowing, “kicking”, flowing by heads, or emitting gas in dangerous quantities. (*Reference Chapter 4, Section 5 of these rules and regulations.)*

(e) Stoves in operation, open fires, etc., shall be extinguished if flammable substances such as oil or gas are near or in the air. (See also, Chapter 5, Section 10 of these rules and regulations).

(f) A mud box shall be utilized on all rigs to convey any fluids away from the working area while pulling wet strings.

(g) In the event that the fluid is coming over top of tubing while pulling and the fluid cannot be swabbed down or circulated with a fluid heavy enough to keep fluid from spilling over, the pipe shall be perforated and the hole circulated until a static condition is reached or an equally effective method utilized to reduce the potential fire or toxic hazard to personnel.

(h) Well cellars, well floors and ground areas adjacent to derricks or tanks shall be kept reasonably free from accumulation of oil which might create or aggravate fire hazards.

Section 2. Machinery Operations, Lockouts, Guarding and Maintenance.

(a) Only the employer-authorized equipment operators shall operate machinery of any kind.

(b) Equipment operators shall be properly trained and judged competent before being authorized as equipment operators.

(c) Equipment operators shall bring any unsafe condition to the attention of the employer for evaluation inspection and correction.

(d) When maintenance or servicing is to be accomplished on power-driven equipment, the immediate source of power to the individual piece of equipment to be worked on shall be locked out. When maintenance or servicing is to be accomplished on electrical lines, air lines, gas lines or other lines containing hazardous materials, the line being worked on shall be rendered safe by emptying, purging, disconnecting or other means before work is begun.

(e) When more than one employee is to work on the same piece of equipment, the employer may designate one employee to be in charge of the lockout procedure.

(f) Safety locks shall not be removed from main power breakers, disconnect switches, or valves until all personnel are in the clear.

(g) All belts, gears, shafts, pulleys, sprockets, spindles, drums, fly wheels, or other reciprocating and rotating parts, with the exception of the cathead, shall be guarded unless they are guarded by location, so positioned to prevent any person from coming in contact therewith. Guarding shall meet the requirements as set forth in *1910.212 & 1910.219 "Machinery and Machine Guarding", or the Wyoming Occupational Health and Safety 1910-General Rules and Regulations, or 29 CFR 1910.212 & 1910.219, if applicable.*

(h) Machinery shall not be operated without all guards properly maintained and in position; except during maintenance, repair or rigup work, when limited testing may be performed by a qualified person.

(i) No employee shall clean or lubricate any machinery where there is danger of contact with a moving part until such machinery has been stopped.

(j) Machinery and equipment shall be maintained in such condition as to ensure safe operations and working conditions.

(k) All guards and protective devices shall be replaced, and proper personnel notified when maintenance is complete.

(l) All tools and equipment used by employees shall be in safe condition.

(m) Electric tools shall be grounded by use of approved devices maintained in proper condition, except "Double Insulated" tools may be used in lieu of the grounding requirement.

(n) Electrical or pneumatic hand tools shall have a deadman switch or arranged so that the starting switch will not be locked in.

(o) Tools or other materials shall not be carried up or down a ladder unless properly secured to the body, leaving both hands free for climbing.

(p) Maintenance personnel on a contract basis shall abide by all safety rules and regulations.

(q) Power rod or tubing tongs shall not be backed up with pipe wrenches or any other device not able to withstand the full torque of the power tool.

(r) Power-driven rod tongs and tubing tongs with front open for putting on and off shall have front doors working properly.

(s) Power jacks shall have a safety lock device.

(t) Equipment used in winching operations shall be inspected, and maintained in safe operating condition.

(u) All winch lines, anchors, snatch blocks, hooks, clamps and other fittings shall be of suitable size and capacity.

(v) Warning signs shall be posted in areas where toxic, poisonous, flammable, or explosive materials or atmospheres exist.

(w) Warning signs shall be posted to denote any unusual hazardous situation during the existence of such a hazard.

(x) Warning signs shall be posted in areas where the use of personal protective equipment is required.

(y) Identification signs shall be conspicuously posted to locate emergency equipment.

(z) Containers of poisonous, toxic, flammable or explosive material shall be properly labeled and appropriately stored according to content.

(aa) (For cylinders used in welding, cutting and brazing operations, see Chapter 5, Section 11). Compressed gas cylinders shall be stored in a well-protected, well-ventilated location, at least twenty (20) feet from combustible materials; assigned storage spaces shall be located where cylinders will not be knocked over or damaged by passing or falling objects, or subject to tampering by unauthorized persons.

(i) Cylinders shall be secured in an upright position; and

(ii) Shall be separated in storage as to full and empty cylinders and shall be separated as to contents; and

(iii) Shall be handled carefully to prevent dropping; and

(iv) Shall be transported with gauges removed and caps in place.

(bb) No material used for cleaning shall have a flashpoint less than 100℉ Examples of materials which have flashpoints below 100℉ are gasoline, naphtha., etc.

(cc) Signs required in this section shall be constructed in accordance with *1910.145, Wyoming Occupational Health and Safety 1910 General Rules and Regulations, or 29 CFR 1910.145, if applicable.*

Section 3. Footings and Locations.

(a) Foundation bases shall be of the appropriate size for well servicing units in operation on the location and shall be graded and drained. Location sites shall be made and maintained to a grade so that oil, substance from oil, water or other movable fluid will drain from working area. Such foundation bases shall be the responsibility of the well owner or operator.

(b) Footing shall be used as required by the existing conditions to provide a table base for the rig up, including mast erection, to support the mast during the most extreme load that will be encountered, and for pipe racking.

(c) If supplemental footing is used, it must be such that the safe bearing capacity of the soil on location is not exceeded and will carry the most extreme load. Supplemental footing is a foundation base other than cement or solid rock.

(d) Figures 1, 2, and 3, taken in part from API Standard 4G Recommended Practice for Maintenance and Use of Drilling and Well Servicing Structures, shall be used as a reference in preparing locations and repairing existing locations that are sub-standard.

Figure 1

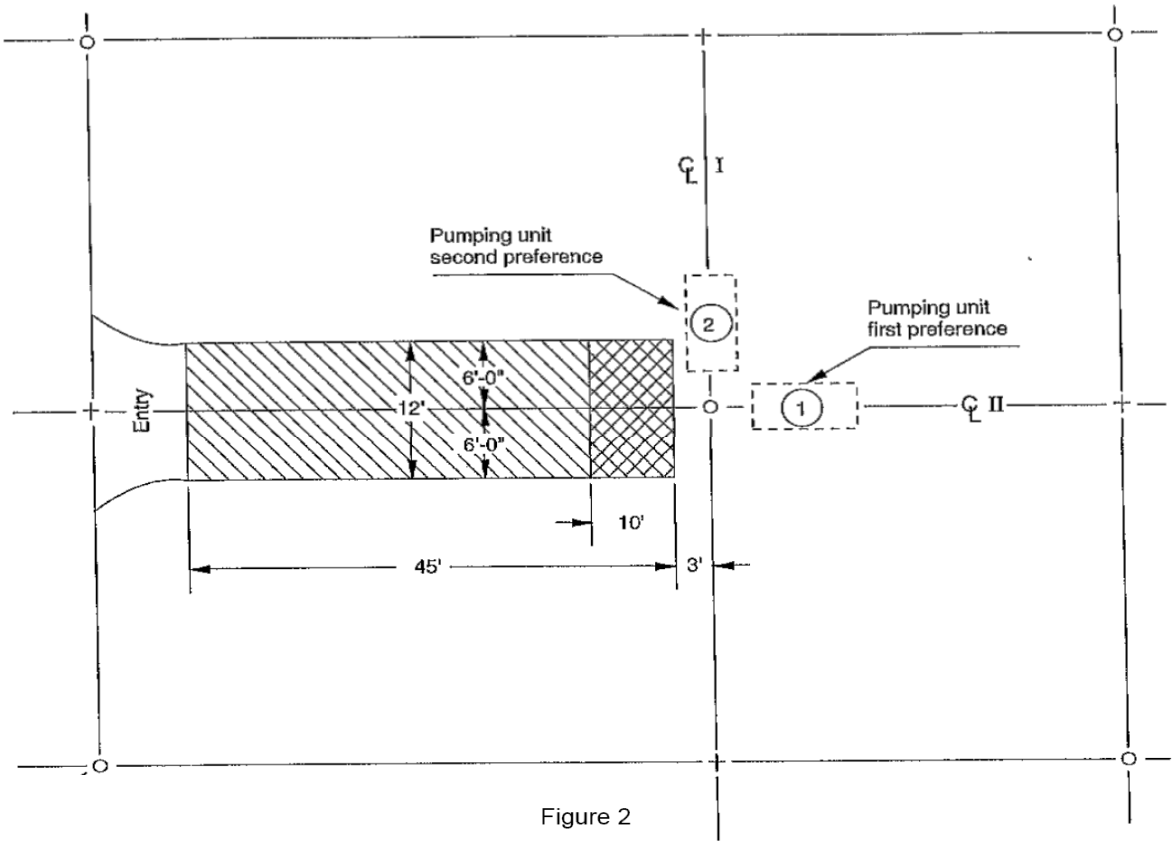

Figure 2

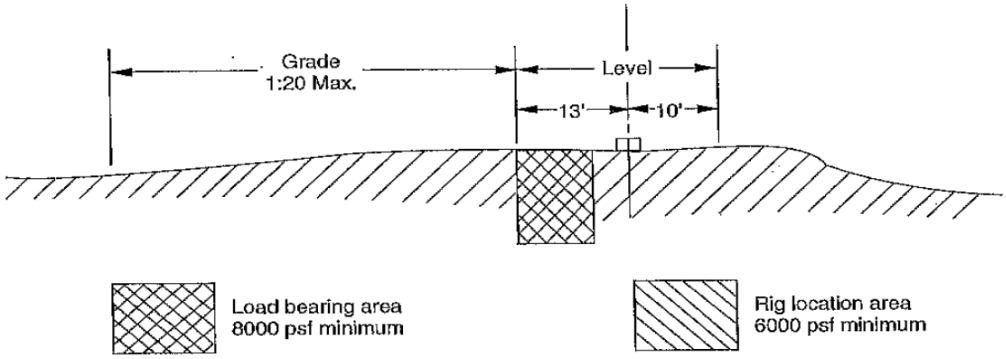

Load bearing area: Compacted sand or gravel requiring picking for removal or better base. Safe bearing capacity desired—min., 8000 psf, level and drained.

Rig location area: May grade away from well along centerline II at max. drop of 1:20. Should be level across grades parallel to centerline I. Safe bearing capacity desired—min., 6000 psf. Allow maneuvering entry for drive in or back in. Drainage of entire area required.

Figure 3

Safe Bearing Capacity of Soils[a]

Soil Type	Bearing Capacity lbf/ft^2 (kPa)
Solid ledge of hard rock, such as granite, trap, etc.	50,000 (2394)
Sound shale and other medium rock requiring blasting for removal	20,000 (958)
Hard pan, cemented sand and gravel difficult to remove by picking	16,000 (766)
Soft rock, disintegrated ledge; in natural ledge, difficult to remove by picking	10,000 (479)
Compact sand and gravel requiring picking for removal	8,000 (383)
Hard clay requiring picking for removal	8,000 (383)
Gravel, coarse sand, in natural thick beds	8,000 (383)
Loose, medium, and coarse sand, fine compact sand	3,000 (144)
Medium clay, stiff but capable of being spaded	4,000 (192)
Fine loose sand	2,000 (96)
Soft clay	Less than 2,000 (96)

[a] Values taken from Marks' Mechanical Engineers' Handbook.

Section 4. Wind Guys.

(a) Four (4) crown-to-ground guys of at least five-eighths (5/8) inch diameter, 6 x 37 class, improved plow steel or steel of higher breaking strength shall be used on every rig up. Exception: This rule does not apply when the manufacturer does not recommend the use of wind guys and the following conditions are met: (1) no one is in the mast during operation, (2) no rod, tubing, etc. is racked in the mast, (3) outriggers are utilized, and (4) the mast height is 60 feet or less.

(b) Two (2) racking boards-to-ground guys of at least nine-sixteenths (9/16) inch diameter, 6 x 37 class, improved plow steel or steel of greater breaking strength shall be used in every rig up where tubing is in the board.

(c) A thorough inspection of all wind guy anchor lines in use shall be made at least once a year, and shall be visually inspected prior to each rig up. All inspections shall be performed by a competent person authorized by the employer to perform such inspection. Wire ropes with any of the following defects shall be removed from service as wind guy anchor lines:

(i) When three (3) broken wires are found in one lay of 6 x 6 wire rope;

(ii) When six (6) broken wires are found in one lay of 6 x 19 wire rope;

(iii) When nine (9) broken wires are found in one lay of 6 x 37 wire rope;

(iv) When eight (8) broken wires are found in one lay of 8 x 19 wire rope;

(v) When wire ropes not described herein are found to have four (4) percent of the total number of wires composing such wire broken in one lay;

(vi) When marked corrosion appears;

(vii) When corroded or broken wires at end connections are noted;

(viii) When end connections are corroded, cracked, bent, worn or improperly applied; or

(ix) When evidence of kinking, crushing, cutting or unstranding are noted.

(d) All chains, boomers, clamps, and tensioning devices remaining in the working guy lines shall be bypassed by continuing the guy line through or around the anchor, then back to the guy line again. The guy line shall be properly secured with at least three (3) U-bolt clamps of proper size or their equivalent.

(i) Fairlead (sheaves) at least in strength to the anchor may be used in the eye of the anchor.

(e) Guy line anchors, including expanding anchors, pipe anchors, concrete anchors, or other approved techniques shall be used, except that temporary, moveable or driven stakes shall not be used. Locations of all anchors shall be marked with an appropriate marker that extends a minimum of 24 inches above ground level. **Exception**: This rule does not apply when the manufacturer does not recommend the use of wind guys and the following conditions are met:

(i) no one is in the mast during operation;

(ii) no rod, tubing, etc. is racked in the mast;

(iii) outriggers are utilized; and

(iv) the mast height is 60 feet or less.

(f) Anchor placement and pull tests.

(i) Anchors shall be proof-tested along an angle that approximates the wind guy's working plane within the anniversary or 12th month prior to the use of the anchors. EXAMPLE: An anchor pull tested in January 2013 shall be usable through the last day of January 2014; likewise an anchor tested on June 10, 2013 is good through

June 30, 2014. Such tests will be made at the poundage determined by the anchor's location - (per Figure 5) within Sector A, B, or C, and computed according to the appropriate sector curve on Figure 4. If any anchor falls in a sector which requires a higher test pull, all four (4) anchors shall be tested as if they were located in the sector requiring the higher pull test. If ground is frozen at the time of the test and anchors are to be used again when the ground is not frozen, the anchors must be retested before use. If any anchor is more than three (3) feet above or below the well ground level, Figure 6 shall be used to determine the adjusted distance for which the pull test requirement will be established using Figure 4. Anchors to be used for singles derricks only shall be proof-tested on 10,000 lbs. and must be located within Sector A, B, or C of Figure 5.

(g) No oil or gas well servicing unit shall be rigged up on a work site unless wind guy anchors have been installed and tested in accordance with this section. Exception: This rule does not apply when the manufacturer does not recommend the use of wind guys and the following conditions are met: (1) no one is in the mast during operation, (2) no rod, tubing, etc. is racked in the mast, (3) outriggers are utilized, and (4) the mast height is 60 feet or less.

(h) Wind guy anchors and servicing unit placement.

(i) Wind guy anchors shall be positioned in accordance with Figure 5.

(ii) The well operator shall provide a visible marker in such a position that a straight line through the marker and through the well head will form an angle with a line through any anchor and the well head which complies with the minimum angle requirements as follows:

*Minimum Angle Distances From Well Centerline

Sector	Each Quadrant	Minimum Angle	Front and Rear	Sides
A	20°	35°	14	10
B	30°	30°	17	10
C	45°	22.5°	24	10

* In the use of Figure 5, if any anchor in the pattern falls within Sector "C", the minimum angle on all anchors is 22.5°. One or more anchors located in Sector "B", with the remaining anchors in Sector "A", requires the minimum angle to be 30° on all anchors. A field determination of the angle can be found by measuring these distances in convenient units such as feet, or paces in reference to the well centerline, the anchors and the longitudinal axis of the unit. (Example: With a single anchor in the pattern located in Sector "C", one could take 24 paces from the well head on an imaginary line which bisects the two adjacent anchors between which the servicing unit will be placed. At this point there would be placed a marker or a stake. One would then take 10 paces to the left and turn so as to be aligned with the well head. If anchors "A" and "C" (Diagram A) are "outside" the alignment, these anchors would be satisfactory. Going back to the center marker, one would repeat this procedure to the right. If anchors "B" and "D" are outside one's alignment, the center marker is satisfactory. If alignment to

either the left or right was not satisfactory, the center marker or stake would be moved to the left or right as needed and the alignment rechecked until the center marker is located properly.)

(A) The visible marker shall be placed on a direct line from the well head which passes through the center marker at least 100 feet from the well.

(iii) The servicing unit operator shall center his unit in line with the marker and the well head.

(iv) Where there is provided a readily visible and clearly defined pad for the positioning of the servicing unit which will maintain the required minimum angle from the longitudinal axis of the unit and the well to any anchor, the use of the marker in h. (2) is optional.

(i) Each well site shall have available at such well site in an accessible, weatherproof container, or in a field office within a five (5) mile radius of the well, an Anchor Record. Such Anchor Record shall state the date the anchor was installed, or the date of any relocation or reinstallation of any anchor at the well site, each anchor's pull test (sector) from Figure 5, and the date, total amount of such pull test, and identification of the tester. This rule does not apply when the manufacturer does not recommend the use of wind guys and the following conditions are met: (1) no one is on the mast during operation, (2) no rod, tubing, etc. is racked in the mast, (3) outriggers are utilized, and (4) the mast height is 60 feet or less.

(i) Each anchor shall be pulled and held for a period of two (2) minutes after all movement (creep) has stopped.

(ii) The anchor record shall state "FOR SINGLES DERRICKS ONLY" if the anchors are only tested to 10,000 pounds.

(j) All anchor testing units shall be certified by the Wyoming Department of Workforce Services - OSHA Division.

(k) Wind guys from crown or tubing (racking) board shall not be any closer than ten (10) feet from power lines, and in no case shall a wind guy be extended above or below a power line.

(l) Installation, testing and maintenance of guy line anchors shall be the responsibility of the well operator. The well operator shall not permit erection of doubles derricks on anchors proof-tested for singles derricks.

(m) Employers shall not erect any doubles derricks on anchors proof-tested for singles derricks.

(n) Gin pole operations shall be performed in accordance with *1910.181, Wyoming Occupational Health and Safety 1910-General Rules and Regulations, or 29 CFR 1910.181, if applicable.*

(o) Guying of masts in accordance with manufacturer's recommendations when such guying patterns meet or exceed the requirements as set forth in Figure 5 shall be permitted.

Diagram A

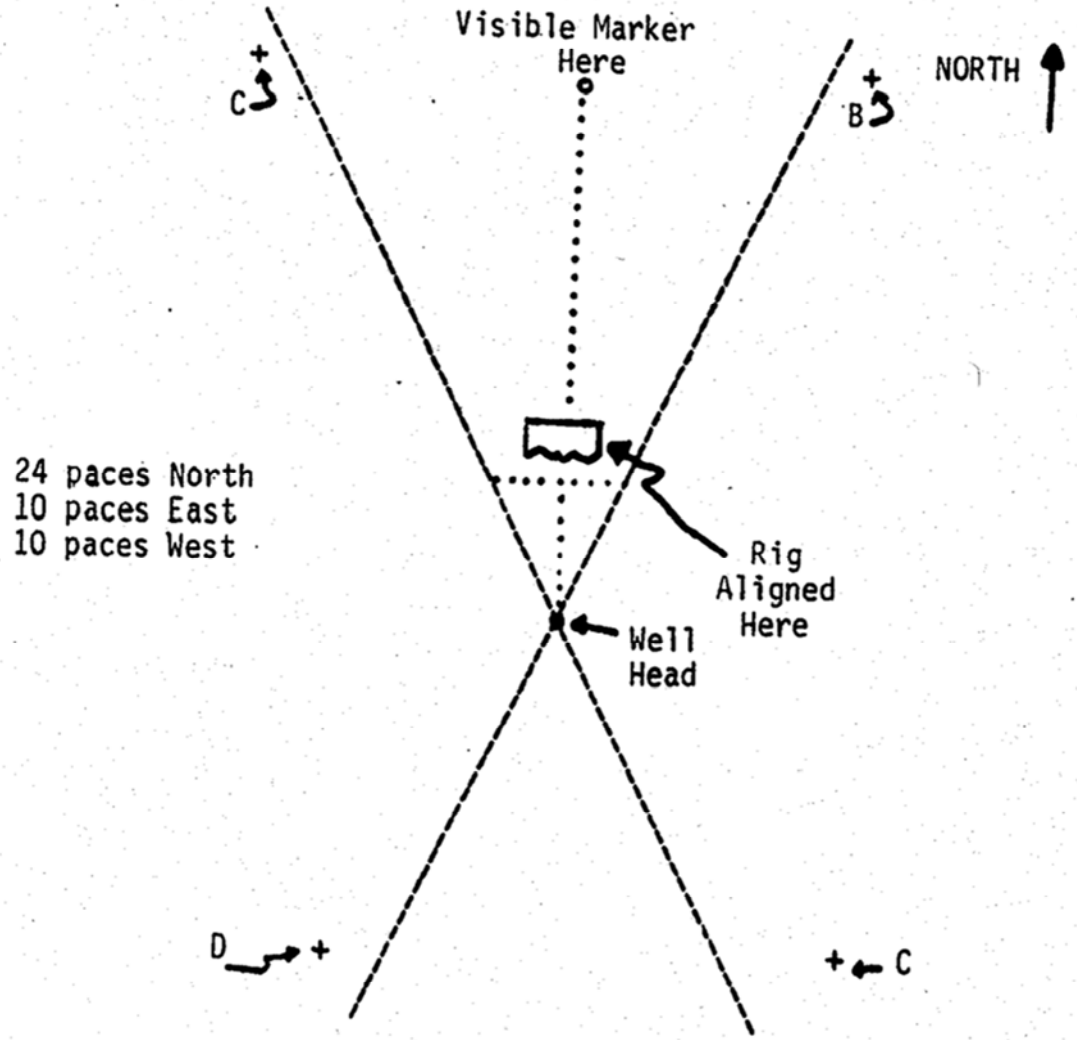

(Note: Directions shown are for this example only and do not require all units to be placed in a North/South position.)

Figure 4

Pull Test requirements for anchors in areas "A" "B" and "C" from Figures 5

Pull Test shall be in one foot increments of radial distance from well head.

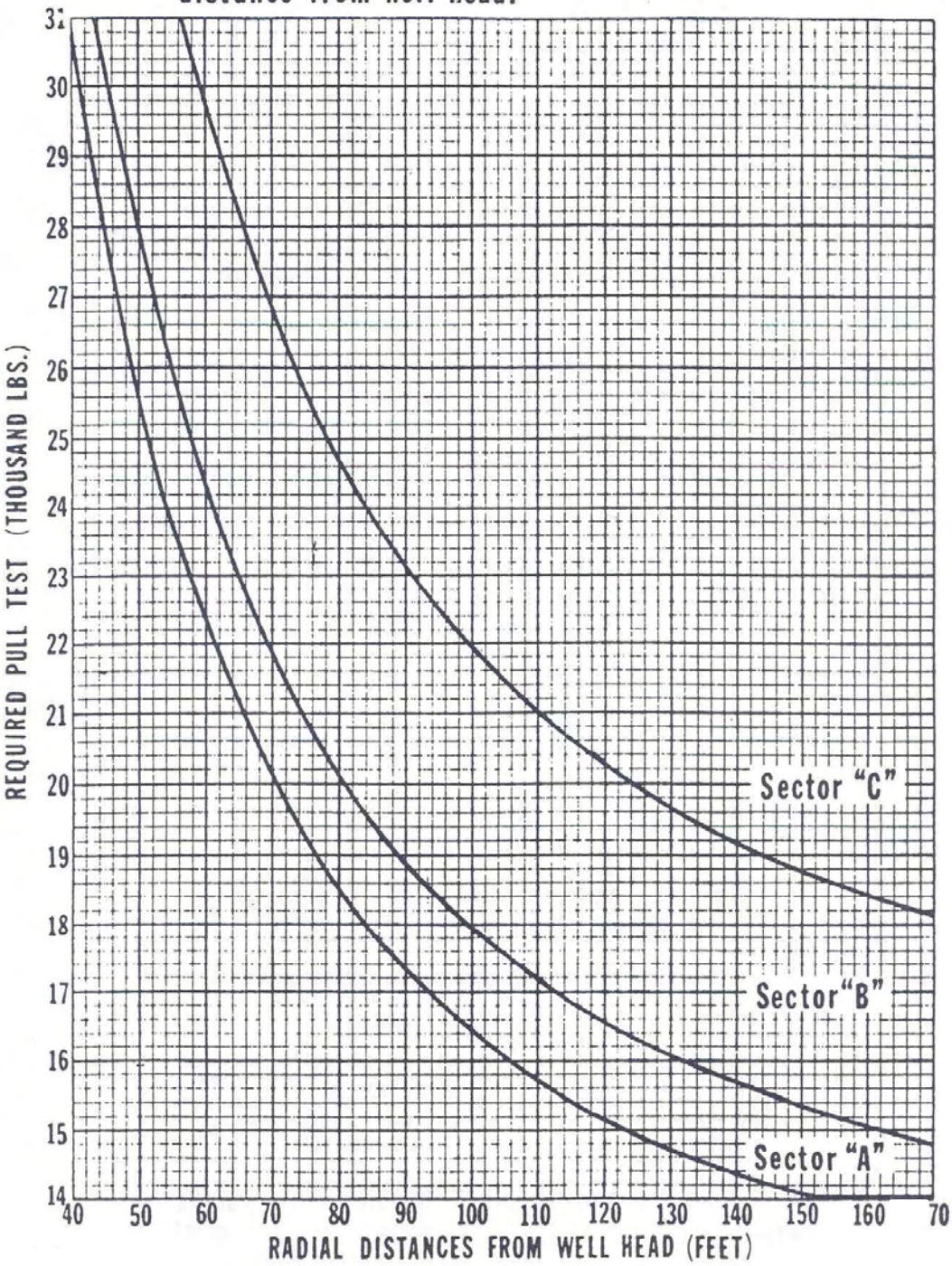

Figure 5

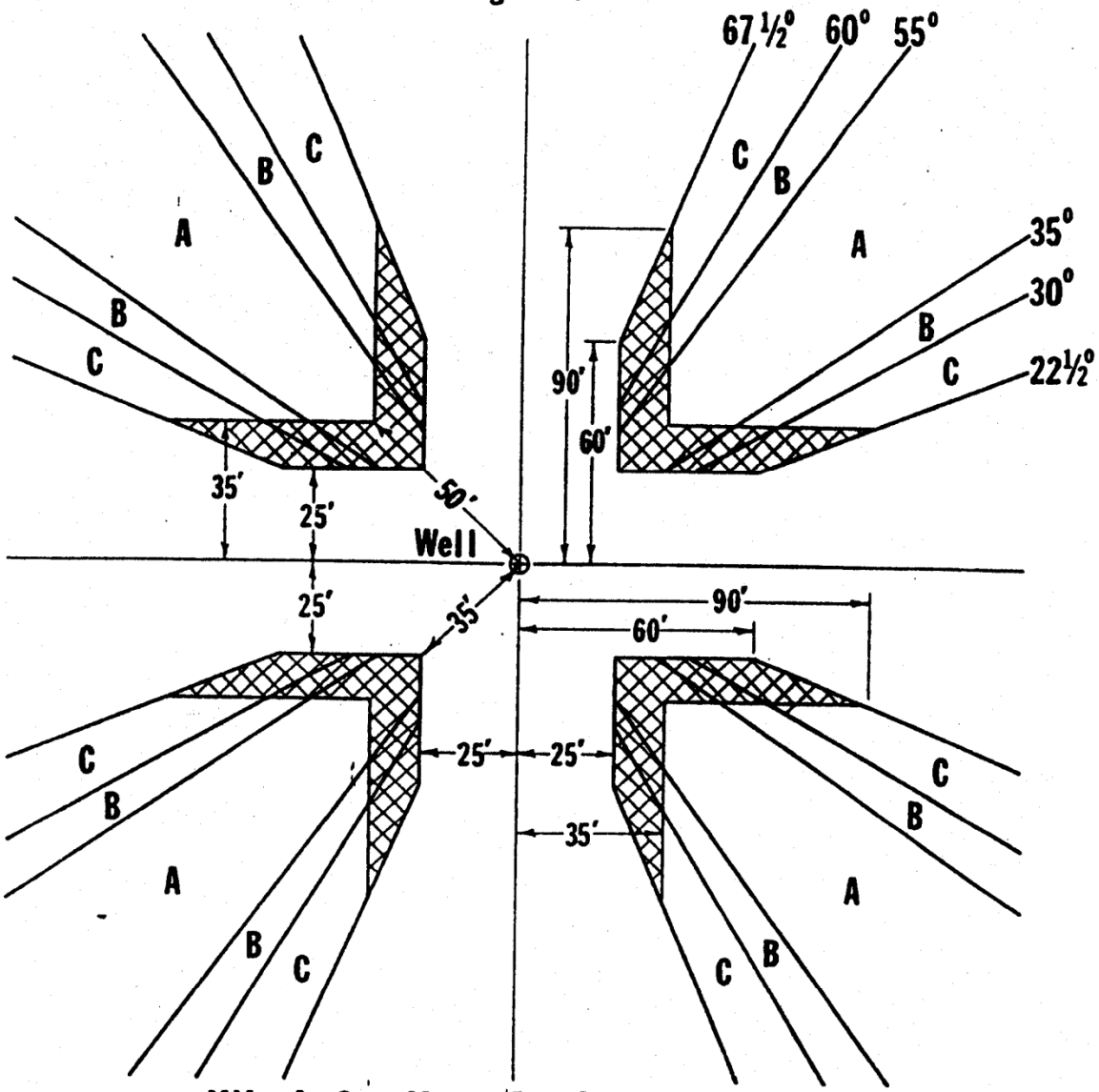

Wind Guyline Anchor Pattern

For Singles and Doubles Derricks

Singles Only

- Anchors must be located in areas labeled "A", "B" or "C". 10,000 pound pull test is required for "Singles" derricks in "A", "B" or "C."

NOTE: Anchor pull test requirements for "Doubles" derricks are to be determined from Figure 4

Figure 6

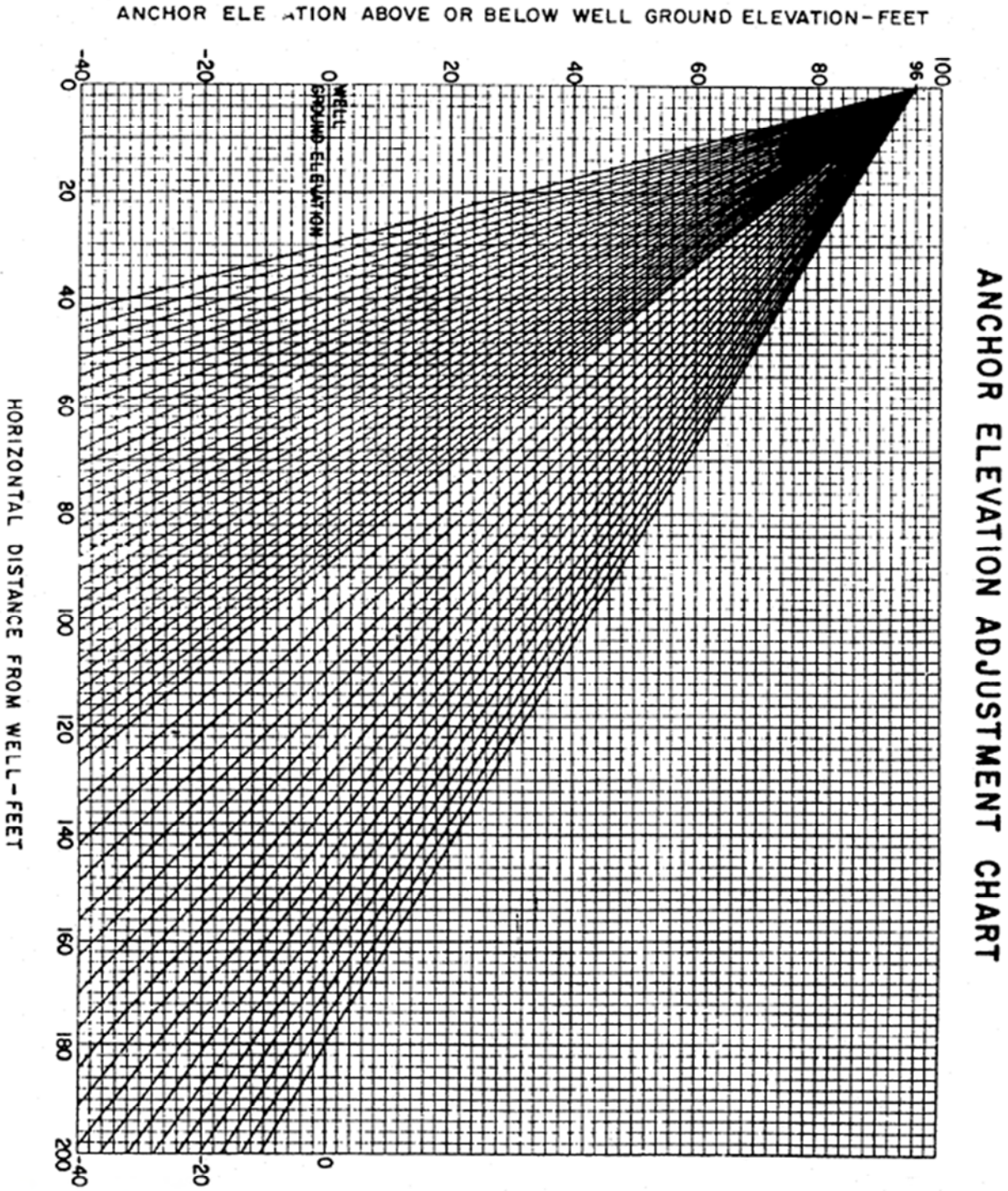

ANCHOR ELEVATION ADJUSTMENT CHART

Directions for use of Figure 6:

After determining the elevation difference between the well ground level and the anchor ground level, find that difference on the Figure designated "Anchor Elevation Above or Below Well Ground Level". Follow that difference line until it meets the vertical line which represents the actual distance from well head to the anchor. Then follow the slanted line, either up or down as applicable, until "0" (Well Ground Level) is reached. Read vertically, and read the "Horizontal Distance from Well - Feet". This adjusted distance is then applied to Figure 4 to determine the required pull test according to the Sector in which the anchor is located. (Example: An anchor located 10 feet above well ground level 100 feet from the well head would, using Figure 6, require the same pull test as though it was 110 feet from the well. An anchor 15 feet below well ground level 80 feet from the well head would require the same pull test as though it was 70 feet from the well head.)

Section 5. Riding Hoisting Equipment

(a) No employee shall ride traveling blocks when rods or tubing or any other downhole equipment is being moved.

(b) No employee shall ride the traveling blocks except in an emergency. Anyone riding the traveling blocks shall wear an approved personal fall arrest system that is adjusted so as to allow the minimum fall distance possible.

(c) The catline shall not be used as a personnel carrier except in an emergency.

(d) Tugger lines shall not be used to hoist personnel unless the manufacturer specifically allows the hoisting of personnel and specifies the use of a bosun’s chair (boat-swan) and full body harness, or equivalent, that is attached to the tugger line.

(i) If there is no manufacturer’s guidance on hoisting personnel, the tugger line with proper rating capacity may be used to reach an otherwise inaccessible location, if a bosun’s chair (boat-swan) with full body harness is used, and the tugger line meets the following requirements:

(A) Self centering, that when released returns to the center position and has locking/braking capability.

(B) Control lever shall be attended at all times while lifting, stabilizing, or lowering of personnel.

(C) Lifting cable will be a minimum of 3/8-inch diameter, and all hoisting equipment shall have a minimum workload of 4,000 pounds.

(D) All connections shall meet ANSI standards.

Section 6. Auxiliary Escape.

(a) All derricks shall be equipped with a specially rigged escape line, of suitable diameter and type. It shall be in good condition, without kinks, free of obstructions, broken wires or a coating of grease.

(i) The landing area must be clear of obstructions and hazards to permit safe landing of the user.

(b) An approved emergency descent device shall be installed on the escape line and kept at the derrickman's working platform. The employer has until December 31, 2014, to replace approved-typed carrier with brake, to an approved emergency descent device.

(i) The emergency descent device shall be installed per manufacturer's specifications.

(ii) The emergency descent device shall be installed and used by personnel trained in its correct application and use.

(iii) The emergency descent device and escape line shall be inspected by the derrickman prior to each trip.

(c) The derrick escape line, or other device, shall be anchored to the derrick so that the personnel carrier shall be available at a readily accessible point at either the rod board or the tubing board.

Section 7. Personnel Fall Arrest System

(a) Every person, when engaged in work at four (4) feet or more above the derrick floor or other working surfaces, shall wear a full body harness with an attached safety line secured to a suitable anchor except where infeasible during rig up and rig down.

(i) Employer shall provide for prompt rescue of employees in the event of a fall.

(ii) A written rescue plan shall be developed and kept on the rig.

(iii) The employees shall be effectively trained on these rescue procedures.

(b) Where these regulations prescribe the use of full body harnesses:

(i) The employee shall use an approved full body harness suitable for the particular job, be in good condition, and shall be provided by the employer;

(ii) The full body harness shall be attached by means of a personal fall arrest system to a suitable anchor and adjusted to allow a minimum of drop line;

(iii) A separate life line shall be provided for each employee requiring a life line; and

(iv) Full body harnesses and life lines shall be checked before each use, be maintained in good condition, and shall be repaired or replaced if found to be defective.

Section 8. Floors and Ladders.

(a) Each service unit shall be equipped with a working platform to be used around the wellhead when personnel perform their duties from ground level. The platform is to be of sufficient size that two (2) men may work on it and the pipe racker can rack pipe without leaving it.

(b) When this platform is raised to four feet (4’) or greater, it shall be equipped with guardrails around its outer edges at a nominal height of forty-two inches (42"). It shall also have midrails and a four inch (4") toeboard around the outer edge of the working platform. Where railings are not feasible, chains or cable of suitable strength may be used. Stairs with four or more risers shall be equipped with hand rails on both sides.

(c) Any temporary stabbing board or other temporary boards placed in the derrick shall be securely fastened.

(d) All ladders shall be constructed of structural grade steel or equivalent.

(e) Ladder rungs shall be a minimum of three-quarters of an inch (3/4") diameter uniformly spaced and not to exceed twelve inches (12”) measured from top of rung to top of next rung and have a minimum width sixteen inches (16”).

(f) No ladder shall lean backwards from the vertical, nor to the side over ten (10°) from vertical.

(g) Each permanent ladder section shall be secured to derrick by welding or bolting.

(h) Clearance in back of ladder. The distance from the centerline of rungs, cleats, or steps to the nearest permanent object in back of the ladder shall be not less than seven inches (7"). When unavoidable obstructions are encountered, minimum clearances for the two rungs on either side of the obstruction shall be measured vertically from the obstruction no less than one and a half inches (1-1/2") to the upper rung and four and a half inches (4-1/2") to the lower rung.

(i) Cage and landing platforms, when used, shall comply with the requirements stated in *1910.27 of the Wyoming Occupational Health and Safety 1910-General Rules and Regulations, or 29 CFR 1910.27, if applicable*. Approved ladder climbing devices may be in lieu of cage and landing platforms. Cage and landing platforms, or approved ladder climbing devices, shall be required on all ladders over twenty (20) feet in height.

(j) A guardrail used or needed for the purpose of actual or potential containment of equipment or material shall be of such construction and strength as to effectively contain the full load or stress which may be anticipated to be applied upon it. (For example, if 25 pieces of six inch (6") pipe are contained by a guardrail, or any attachment to the guardrail, such guardrail and attachment must be capable of safely holding that quantity of pipe, plus an additional allowance for at least two (2) employees, assuming 200 pounds per employee.)

(k) All mast ladders on all servicing rigs are exempted from the requirements of subsections (e) and (h) of this section, provided the employer makes available and requires the use of an approved personal fall arrest system.

Section 9. Pipe Racks

(a) Pipe racks shall be so designed to support any load to be placed thereon.

(i) Pipe racks shall be set level laterally on a stable foundation. They may slope front to back to facilitate laying down or picking up pipe.

(ii) Provisions shall be made to prevent pipe, tubular material or other round material from rolling off pipe racks.

(b) No employee shall be permitted between the pipe racks and a load of pipe during loading, unloading and in transferring operations.

(i) Pipe shall be loaded and unloaded layer by layer, with bottom layer pinned or blocked securely on all four corners.

(ii) When pipe is being moved or transferred between pipe racks and truck trailer, the temporary supports for skidding or rolling shall be so constructed, placed and anchored as to support the load that is placed on them.

(c) During weather of potential freezing, pipe standing on end which contains water-based fluid with an API funnel viscosity greater than 75 seconds shall be positioned so as to afford proper drainage.

Section 10. Clothes Change Rooms.

(a) Change rooms shall be kept reasonably clean and sanitary at all times.

(b) Trash, waste paper, dirty rags, clothing saturated with oil, etc., shall not be allowed to accumulate in change rooms.

(c) Change rooms with stoves in operation shall not be less than 120 feet from the well or well bore when hydrocarbons or other volatile substances are in the well.

Section 11. Safety Procedures for Grinding, Welding, Cutting and Brazing.

(a) Grinding, welding, cutting, brazing or the use of an open flame or a non-explosion proof heater within 120 feet of the well bore shall require a written hot work permit. The hot work permit must adequately address the requirements listed in (i), (ii), and (iii) below and be maintained at the job site while applicable work is in process.

(i) Pre-Work Stage Communication Meeting
- (1) Simultaneous operations.
- (2) Air/gas testing with LEL monitor
- (3) Equipment isolation
- (4) Equipment preparation
- (5) Identification of hazards
- (6) Emergency procedures

(ii) Work-In-Progress Stage:
- (1) Air/gas testing with LEL monitor
- (2) Personal protective equipment requirements
- (3) Fire watch
- (4) Special procedures/precautions

(iii) Return to Service Stage:
- (1) Authorization and turnover signatures
- (2) Posting of permit

(iv) Welding, cutting and brazing more than 120 feet from the well bore shall be performed in compliance with *1910.252(d) of the Wyoming Occupational Health and Safety 1910 - General Rules and Regulations, or 29 CFR 1910.252(d), if applicable.*

(b) Proper protective hoods and glasses shall be worn by the welder.

(c) Fire extinguishers shall be provided for welding operations as required by Chapter 4, Section 6(i) of these rules and regulations.

(d) Compressed gas cylinders shall be stored in a well-protected, well ventilated location, at least twenty (20) feet from combustible materials. Cylinders

should be stored in definitely assigned places away from elevators, stairs or gangways. Assigned storage spaces shall be located where cylinders will not be knocked over or damaged by passing or falling objects, or subject to tampering by unauthorized persons. Cylinders shall not be kept in unventilated enclosures, such as lockers and cupboards.

(i) Cylinders shall be secured in an upright position;

(ii) Cylinders should be separated in storage as to full and empty cylinders and shall be separated as contents, either by a distance of twenty (20) feet or by a non-combustible barrier at least five feet (5') high having a fire-resistance rating of at least one-half hour;

(iii) Cylinders shall be handled carefully to prevent dropping;

(iv) Cylinders shall be transported with gauges removed and caps in place, except cylinders in use on welding trucks or carts in the work area.

(e) Oxygen cylinders, and all attachments thereto, shall be kept free of all grease and oil and other hydrocarbons.

CHAPTER 6

EQUIPMENT

Section 1. Derricks

(a) Each derrick or mast shall show name of manufacturer, safe load capacity, wind load capacity of miles per hour and capacity rating of derrick or mast.

(b) No derrick or mast shall be subject to a compression load greater than the safe load limit shown on the manufacturer's plate.

(c) Derricks, mast guying and foundations shall comply with the standards for guy lines, anchors and foundation bases for well servicing units.

(d) Derricks and masts shall be equipped with guards which shall prevent the hoisting lines from being displaced from the sheaves during operations or when being raised or lowered from the operating position.

(e) A visual inspection of the service unit shall be made by a qualified person before the derrick or mast is raised or lowered.

(f) A qualified person shall be in charge of raising or lowering a derrick.

(g) Before any derrick is raised or lowered, all tools and material not secured to the derrick shall be removed from the derrick.

(h) The derrick shall be level and plumb before guys are tightened.

(i) Before any load is put on the derrick, all crown guys shall be tightened properly.

(j) No employee shall be allowed in the derrick when it is being raised or lowered.

(k) Each derrick platform shall be constructed, maintained and secured to the derrick to withstand the weight of employees or other stresses which may normally be placed upon it.

(l) Finger boards shall be attached to the derrick to keep them from falling if jarred loose or broken.

(m) Unattached tools or material of any kind shall not be kept in the derrick above the derrick floor unless there is occasion for their immediate use.

(n) There shall be no openings large enough to permit an employee to fall between the beams or main supports or framework of the crown.

(o) No employee shall be in the derrick when the initial pull is made on the rods or tubing or when working or jarring stuck rods or tubing.

(p) All masts shall be equipped with locking devices with sufficient strength to prevent the mast from bending at the hinge point. The locking device shall be approved by the rig manufacturers. The mast will be locked as soon as the mast is in position and remain locked until the mast is to be lowered.

(q) Tubing or rod shall be secured to the appropriate board prior to the employee leaving the board in high winds.

Section 2. Hoisting Lines, Wire Ropes, Fiber Ropes and Chains.

(a) A dead-line anchor for a hoisting line (wire rope) shall be so constructed, installed and maintained that its strength shall at least equal the working strength of the hoisting line.

(b) Every hoisting line (wire rope) used in servicing operations shall have a minimum safety factor of three (3), determined as follows:

Safety Factor = B (Nominal breaking point of the wire rope in pounds) / W (Calculated total static load in pounds)

(i) A minimum safety factor of two (2) shall be permitted only in the following operations:

(A) On rotary drilling line when setting casing; or

(B) When pulling on stuck pipe and similar infrequent operations.

(c) All hoisting lines (wire rope) shall be visually inspected by a competent person of the servicing rig daily and shall be thoroughly inspected at least each thirty (30) days with a record made of the monthly inspection, designating any noted defects. The last six (6) months of monthly inspections records shall be kept on the servicing rig. Any wire rope shall be removed from service when any of the following conditions exist:

(i) When wire lines are found to have four (4) percent of the total number of wires composing such wire broken in one lay;

(ii) When marked corrosion appears;

(iii) When corroded or broken wires at end connections are noted;

(iv) When end connections are corroded cracked, bent, worn or improperly applied; or

(v) When evidence of kinking, crushing, cutting or unstranding are noted.

(d) The wire rope (wire line) manufacturer's recommendations shall be utilized.

(e) On any drum on which a hoisting line (wire rope) is wound, the end of the hoisting line (wire rope) shall be fastened securely to the drum.

(i) When the wire rope is in the fully extended position there shall be at least three wraps on the drum to provide sufficient snubbing action.

(f) The hoisting line (wire rope) shall not be removed from the drum until:

(i) The traveling blocks are laid down; or

(ii) The traveling blocks are held suspended by a separate wire rope or chain of equivalent strength.

(g) The hoisting line (wire rope) shall not be in direct contact with any derrick member, any stationary equipment or material in the derrick, except the crown block and any traveling block sheaves, a line spooler, a line stabilizer, weight indicator or dead line anchor.

(h) Every overhead sheave or pulley which a line spooler counterweight rope runs shall be fastened securely to its support.

(i) Chains.

(i) The practice of placing bolts or nails between two links to shorten chains is prohibited.

(ii) Splicing or repairing broken chains shall be accomplished by use of repair devices approved by the manufacturer. The use of welding, brazing, bolts, wire, nails and other such methods or devices is prohibited.

(j) Winches and cables.

(i) Cable shall be in good repair. When respooling, care shall be used to avoid kinking. Cable clamps and thimbles, properly installed, shall be used.

(ii) Personnel shall not stand near, step over or go under a cable while it is under tension.

(k) Chain used in connection with servicing or production operations shall be suitable for the type of service.

(l) Any chain shall be discarded or repaired if it has been stretched to the point where links bind, kink, lock or it has been broken.

(m) Fiber ropes cut, frayed (through one or more lays) or that have been in contact with caustic acid, or any other chemical that might weaken them, shall be replaced immediately.

(n) Cable clamps shall be installed according to the chart in the Rigger's Handbook.

APPLYING WIRE ROPE CLIPS

The only correct method of attaching U-bolt wire rope clips to rope ends is shown in the illustration. The base of the clip bears against the live end of the rope, while the "U" of the bolt presses against the dead end.

The clips are usually spaced about six rope diameters apart to give adequate holding power.

Before ropes are placed under tension the nuts on the clips should be tightened. It is advisable to tighten them again after the load is on the rope to take care of any reduction in the rope's diameter caused by the weight or tension of the load.

A wire rope thimble should be used in the loop eye to prevent kinking when wire rope clips are used.

The correct number of clips for safe application, and spacing distances, are shown in the table below.

Number of Clips and Spacing for Safe Application

Rope Diam. in.	Approx. Weight lb	Minimum No. Clips for Each Rope End	Minimum Spacing* of Clips in
3/16	0.10	2	1⅝
1/4	19	2	1⅞
5/16	.29	2	1⅞
3/8	47	2	2¼
7/16	70	2	2⅝
1/2	78	3	3
5/8	1 06	3	3¾
3/4	1 59	4	4½
7/8	2.40	4	5¼
1	2 72	4	6
1⅛	3 20	5	6¾
1¼	4 50	5	7½
1⅜	4 60	6	8¼
1½	5 80	6	9
1⅝	7 20	6	9¾
1¾	9 50	7	10½
2	12 50	8	12
2⅛	15 50	8	13½
2½	18 00	8	15

The Right Way to Clip Wire Rope | The Wrong Way to Clip Wire Rope

EXAMPLE A

TWIN-BASE CLIP
DROP FORGED

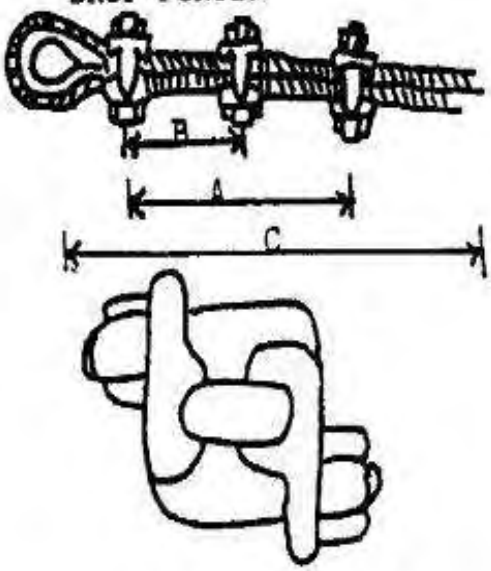

Laughlin Type

EXAMPLE B

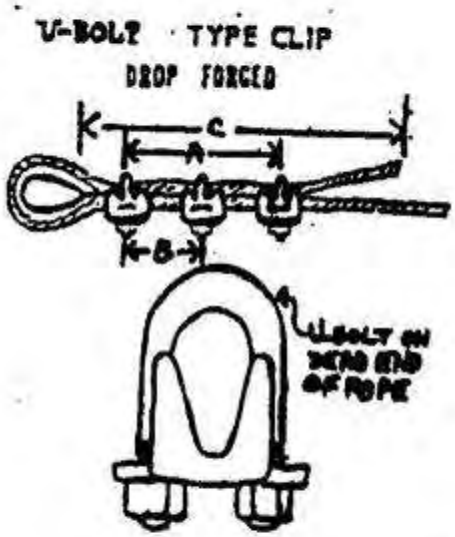

EXAMPLE C

EFFICIENCY OF WIRE ROPE CONNECTIONS
As Compared to Safe Loads on Wire Rope

Figure	Type of Connection	Efficiency
	Wire Rope	100%
1	Sockets – Zinc Type – properly attached	100%
2	Wedge Sockets	70%
3	Clips – Crosby Type	80%
4	Knot and Clip (Contractors Knot)	50%
5	Plate Clamp – Three Bolt Type	80%
6	Smooth Clamp	80%
7	Spliced Eye and Thimble:	
	½" and smaller	100%
	⅝" to ⅞"	95%
	⅞" to 1"	88%
	1⅛" to 1½"	82%
	1⅝" to 2"	75%
	2⅛" and larger	70%

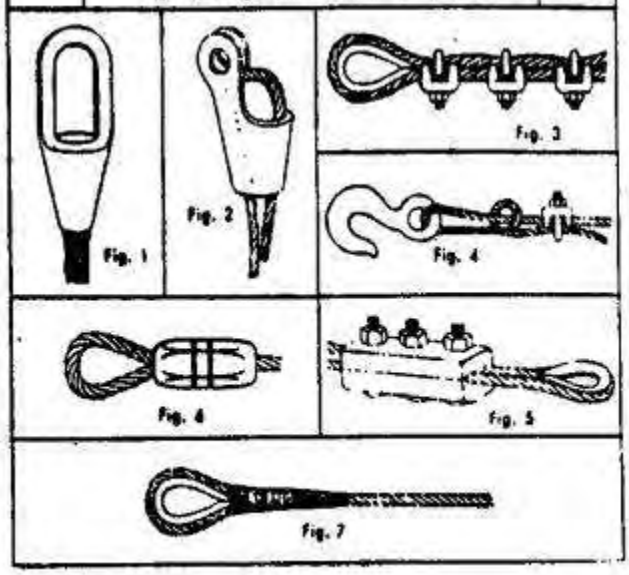

Section 3. Hoisting Block.

(a) All traveling blocks shall be properly guarded.

(b) Any slip hook used for lifting shall be equipped with a safety latch or safety cable and pinned.

(c) All traveling blocks, elevators, elevator links or similar equipment shall be reasonably free of projecting bolts, nuts, pins or other parts upon which clothing of workers may be caught.

(d) All traveling blocks and similar equipment shall be maintained in good working condition and never exceed manufacturer's listed rating.

Section 4. Weight Indicators.

(a) Every well servicing rig shall be equipped with a reliable weight indicator.

(b) A weight indicator shall be used to indicate the suspended load.

(c) Weight indicators shall be safely secured and shall be easily visible to the equipment operator.

(d) Manufacturer's rated load capacity of the servicing unit shall not be exceeded.

Section 5. Drawworks.

(a) A visual inspection of the drawworks and its working parts shall be made each day or tour before operations begin.

(b) All guards and covers shall comply with Chapter 5, Section 2 of these rules and regulations.

(c) If lubrication fittings are not outside of guards, machinery shall be completely stopped for oiling and greasing.

(d) When it becomes necessary to remove a guard, the drawworks shall be completely stopped.

(e) All air compressors shall have at least one (1) pressure control for proper air flow.

(f) The safety pressure relief valve on main air tank shall be checked periodically and kept in proper working order.

(g) All valves or other working devices on hydrostatic lines shall never be set higher than the design rating of the hydraulic system or the manufacturer's listed rating of the lines, whichever is less.

(h) Safety pressure relief valves on hydrostatic lines shall never be set higher than the design rating of the hydraulic system or the manufacturer's listed rating of the lines, whichever is less.

(i) The brakes, linkage and brake flanges on the drawworks shall be tested and visually inspected each day.

(j) The equipment operator shall not leave the brake without tying the brake down or securing it with a catch lock.

(k) The equipment operator shall not leave the brake while hoisting drum is in motion.

(l) Catheads on which a rope is manually operated shall have a rope guide to hold the on- running rope in alignment with its normal running position against the inner flange.

(m) When a rope or line is in use on a cathead, all other ropes or lines shall be placed so as not to come in contact with the cathead or with the rope or lines on the cathead.

(n) When the cathead is unattended, no rope or line shall be left wrapped on or in contact with the cathead.

(o) When the cathead is in use, there shall be an authorized employee at the drawworks control or safety shutdown switch by the cathead to stop rotation in case of emergency.

(p) Catheads must be checked for grooves and rebuilt and turned or replaced when necessary to prevent fouling.

Section 6. **Electrical and Internal Combustion Engines**.

(a) All electrical equipment, wiring, fixtures and cords shall be installed and used in accordance with *Subpart S, Wyoming Occupational Health and Safety 1910 - General Rules and Regulations*, *or 29 CFR 1910 Subpart S, if applicable*.

(b) Portable engine-driven light plants shall be located a minimum of 120 feet from the well bore when hydrocarbons or other volatile substances are present unless the light is intrinsically safe and a spark arrestor or equivalent equipment installed on engine exhaust.

(c) Spark arrestors or equivalent equipment shall be provided on all internal combustion engines exhausts located within 120 feet of the well or well bore.

(d) Emergency shut-down device(s) that will close off the combustion air shall be properly installed and identified on all diesel engines that are an integral part of the servicing rig or are operated as a stationary or mobile engine of a servicing rig within 120 feet of the well or well bore.

Section 7. Mud Pits and Tanks.

(a) [Reserved]

(b) Tanks for flammable materials shall be set so that if the tanks leak or rupture, the flammable materials will drain or be contained away from the well and equipment by the use of ditches or dikes or their equivalent.

(c) All fixed mud guns used for jetting shall be pinned or hobbled when unattended.

(d) Hoses used for jetting operations shall be manned, and there shall be an employee stationed at the pump controls to shut down the pressure in the event of emergency.

(e) When necessary to enter a tank which contained toxic fluid, the rules and regulations as specified in Chapter 4, Section 5, shall apply.

(f) All discharge lines shall be safely secured.

(g) Portable tanks shall be located where it is not possible for personnel or equipment to come into contact with overhead power lines.

(h) All portable tanks in excess of five (5) feet in height, used in testing and treating, shall be equipped with fixed metal ladder with:

(i) Rungs of three-fourths (3/4) of an inch in diameter or its equivalent;

(ii) Sixteen (16) inches horizontal rung clearance; and

(iii) Twelve (12) inches vertical clearance between top of one rung and top of next rung;

(iv) Seven inches clearance between rungs and tank.

(i) All tanks over five (5) feet in height, used in testing and treating, shall be equipped with fixed permanent risers when it is necessary to circulate or flow fluids into top of tank. No employee shall jump from one tank top to another.

Section 8. Pumping Units.

(a) The operator shall assure that after the pumping unit is turned off, the master control shall be locked in the "off" position, the brake set, and the means to secure the weights in a safe manner to prevent any movement of weights or beam is employed before servicing operations begin.

(b) Braking systems on all pumping units shall be maintained and kept in proper working order.

(c) A wire rope sling of sufficient strength shall be used to handle the horse’s head if removal or installation is necessary. The head shall be secured after installation in accordance with manufacturer's specifications.

CHAPTER 7

SPECIAL OPERATIONS

Section 1. Applicability.

All applicable requirements of these rules and regulations, in addition to those found within this Chapter, shall apply to special operations.

Section 2. Swabbing or Other Wire Line Operations.

(a) There shall be no person or employee the derrick or within ten (10) feet of the wellhead during the time the swab line or other wire line is being run in the hole.

(b) All oil savers shall be of the types that do not require an employee or person to be near the lubricator on wellhead to control the oil saver.

(c) All swab lines, blow down lines flow lines to pits or tanks shall be securely anchored. Whenever hydrocarbons or other volatile fluids may be expected these lines shall extend a minimum distance of seventy-five (75) feet from the well.

(d) On wells where there is a possibility of flow, there shall be a lubricator in use that will allow the removal of the swab or other tools without turning the well loose to the atmosphere.

(e) There shall be no radio or radio-phone transmitters operated where there is a perforating in progress.

(f) Swabbing operations shall be restricted to daylight hours; (one-half (1/2) hour before sunrise to one-half (1/2) hour after sunset.)

Section 3. Flare Pits and Flare Lines.

(a) When lighting a flare pit, the lighting shall be done from the upwind side. When there is no wind or the wind direction is uncertain, no attempt shall be made to light the pit unless the operator can position himself in an explosive-free area. The use of hand thrown rags or similar flaming objects is prohibited.

(b) There shall be a minimum of 120 feet from the well bore to the end of the flare line.

Section 4. Cementing.

(a) Specific requirements.

(i) A pressure test on pump discharge lines when squeeze cementing shall be made at 1,000 psi over the maximum pressure specified by customer for his well equipment.

(ii) All valves in discharge lines shall be checked to see that they are open before giving orders to pump.

(iii) During operations each employee designated to handle the pumping shall remain constantly at his designated position while the pump is in operation, unless relieved by an authorized employee as directed by the supervisor on that job.

(iv) Unauthorized persons shall remain at least seventy-five (75) feet from all pumping operations and pressure testing operations.

(v) Cementing pressure shall not exceed the equipment's maximum safe working pressure.

Section 5. Acidizing, Fracturing and Hot Oil Operations.

(a) Specific requirements.

(i) A check valve shall be placed in the discharge line as near the well bore as

(ii) All blending equipment used in fracturing operations with flammable or combustible fluids shall be grounded to a conductive rod driven into the ground and all sand hauling equipment unloading sand into blender hopper shall be "electrically bonded" to the blender.

(iii) All supercharged suction hoses shall be covered with hose covers to deflect fluids when pumping flammable or combustible fluids.

(iv) A pretreatment pressure test on pump discharge lines shall be made at 1,000 psi over the maximum expected treating pressure specified by the customer for his well equipment.

(v) All valves in discharge lines shall be checked to see that they open before orders are given to pump.

(vi) During operations each employee designated to handle the pumping shall remain constantly at his designated position while the pump is in operation, unless relieved by an authorized employee as directed by the services supervisor on that job.

(vii) All acidizing, fracturing, and hot oil trucks and tanks shall be at least seventy-five (75) feet from the well bore.

(A) All special servicing equipment that could produce a source of ignition shall not be permitted within seventy-five (75) feet of any tank containing a flammable or combustible material.

(B) When treating condensate with a hot oiler, if the hazard is greater because of starved suction, the equipment is placed closer than seventy-five (75) feet.

(viii) Unauthorized persons shall remain at least seventy-five (75) feet from all pumping operations and pressure testing operations.

(ix) All flammable or combustible fluid spilled on location shall be covered with dirt before pumping operations start.

(x) The fire truck, when on location, shall be spotted upwind of the operation when possible.

(xi) Treating pressure shall not exceed equipment maximum safe working pressure.

(xii) If pumping a flammable or combustible fluid, all electrical or internal combustion equipment, and all fires, within seventy-five (75) feet of the well bore, not used for performance of the job, shall be shut down or off during treatment.

(xiii) Flammable or combustible fluids shall not be bled back into open measuring tanks on equipment designed for pumping.

(xiv) All spilled oil or acid shall he covered or properly disposed of after breakout with adequate precautions taken for personnel to prevent contact with such material.

(xv) All pumping operations involving hydrocarbons or volatile fluids shall be completed within daylight hours.

(xvi) The well operator or his designated representative shall conduct a safety meeting with all involved personnel prior to testing or treating operations.

(xvii) No person involved in hot oil operations shall be permitted to wear nylon or polyester clothing.

Section 6. Safety Procedures for Fuel Tanks.

(a) Specific requirements.

(i) Except for the fuel in the tanks of the operating equipment, Class III liquids, and those with flashpoints higher than Class III liquids, no gasoline or other liquid fuel shall be stored within seventy-five (75) feet of a well bore.

(ii) Propane or butane tanks shall be placed parallel to any side of the rig.

(iii) Tanks shall be properly marked to indicate their contents.

(iv) Piping or tubing for fuel tanks shall be protected against damage from vehicles by elevation, burying or other effective means.

CHAPTER 8

SAFETY PROCEDURES FOR BOILERS, AIR COMPRESSORS AND PRESSURE VESSELS

Section 1. Boilers.

(a) Portable boiler used for rig heating shall be constructed, installed, operated, inspected and repaired to conform to the Engineering Standards of ASME Boiler and Pressure Vessel Code, Sections I and VIII-1971.

(b) All boilers, while in operation, shall be under the supervision of a competent crew member.

(c) If any defects are found in a boiler or appurtenant equipment, the equipment operator in charge shall be notified immediately by the boiler operator and immediate corrective action taken.

(d) The safety pressure relief valve and discharge end of exhaust pipes leading from boilers shall be located or placed in such a way as to prevent discharge from being released to the atmosphere where injury to any person or property may result.

(e) Steam boilers shall be located at least 120 feet from the well bore when hydrocarbons or other volatile substances are in the well. (They should be located on the prevailing upwind side of the rig.)

(f) Each boiler shall be equipped with safety pressure relief valves set at a pressure not to exceed the working pressure of the boiler.

(g) Fuel valves shall not be located in front of the fuel burner, thus reducing potential of a burn in case of a flash-back.

(h) Ample lighting shall be provided so that water levels can be easily read.

(i) Boiler flues shall be kept reasonably clean at all times.

(j) Reclaimed water used in a boiler shall not be contaminated with crude or other oils.

(k) There shall be no valve at the discharge opening of a safety pressure relief valve, nor in the discharge pipe connected thereto.

(l) The safety pressure relief valve shall be connected as close to the boiler steam area as possible, with no valves and minimum piping between the safety pressure relief valve and the boiler.

(m) The piping on the discharge side of the safety pressure relief valve shall be properly secured and shall contain no valves.

Section 2. Safety Procedures for Air Compressors.

(a) Air compressors used or operated shall be constructed, installed, operated and repaired to conform to the ASME Boiler and Pressure Vessel Code, Section VIII-1971.

(b) All air compressors, while in operation, shall be under the supervision of a competent employee.

(c) If any defects are found in the air compressors, receiver tank or appurtenant equipment, the equipment operator in charge shall be notified immediately and immediate corrective action taken.

(d) The safety pressure relief valve and discharge end of exhaust pipes leading from air compressors shall be located or placed in such a way as to prevent discharge from being released to the atmosphere where injury to any person or property may result.

(e) Safety pressure relief valves shall be inspected at frequent intervals by the equipment operator.

(f) Each air compressor shall be equipped with safety pressure relief valves set at a pressure not to exceed one working pressure of the receiver tank.

(g) Ample lighting shall be provided so that the gauges can be easily read.

(h) Fittings and pipe shall be properly installed and shall be capable of withstanding the discharge pressure of the compressor used.

(i) Emissions discharged from a safety pressure relief valve shall be piped to a place where they will not endanger employees.

(j) There shall be no valve in the discharge opening of a safety pressure relief valve nor in the discharge pipe connected thereto.

(k) The piping connected to the pressure side and discharge side of a safety pressure relief shall not be smaller than the normal pipe size opening.

(l) All air compressors shall have at least one (1) pressure control for proper air flow.

(m) The safety pressure relief valve on main air tank shall be checked periodically and kept in proper working order.

Section 3. Safety Procedures for Safety Pressure Relief Valves, Pumps, Fittings, Piping, Hoses and Pressure Vessels.

(a) All pressure vessels, safety pressure relief valves, pumps, fittings, piping and hoses shall be constructed, installed, operated, inspected and repaired to conform to the ASME Boiler and Pressure Vessel Code, Section VIII -1971.

(b) All power-driven pumps shall be equipped with a safety pressure relief valve and an operating gauge.

(c) The safety pressure relief valve shall be set to discharge at a pressure not in excess of the established working pressure of the pump, pressure vessel, pipe and fittings.

(d) A guard shall be placed around the shearing pin and spindle of a safety pressure relief valve.

(e) The emissions discharged from a safety pressure relief valve shall be piped to a place where they will not endanger employees.

(f) There shall be no valve between a pump and its safety pressure relief valve.

(g) There shall be no valve in the discharge opening of a safety pressure relief valve nor in the discharge pipe connected thereto.

(h) The piping connected to the pressure side and discharge side of a safety pressure relief valve shall not be smaller than normal pipe size opening of said valve.

(i) The piping on the discharge side of a safety pressure relief valve shall be properly secured.

(j) Clamps and safety cables shall be used to fasten the kelly hose at the standpipe end to the derrick and at the swivel end to the swivel housing.

(k) Discharge hoses under pressure shall be secured by clamps and safety cables or chains.

(l) All discharge lines (pressure lines) shall be placed so as not to be under any mobile equipment nor shall any mobile equipment be placed over any such lines.

(m) Fittings, hoses, pumps, pressure vessels, piping and safety pressure relief valves shall be properly installed and shall be rated to coincide with the discharge pressure of the pressure producing source.

CHAPTER 9

HYDROGEN SULFIDE (H_2S) GAS

Section 1. H_2S Safety Equipment and Procedures.

(a) The following safety equipment shall be provided and operational on site before the well bore is opened that is suspected or known to contain H_2S gas.

(i) Every employee on location shall wear a calibrated personal H_2S monitor.

(ii) Thirty (30) minute (or greater) Self-Contained Breathing Apparatus (SCBA) especially designed for use in H_2S shall be available on location for each essential personnel for purpose of rescue and abatement of the release.

(iii) An H_2S contingency Plan shall be developed and established for each specific site location to include the following:

(A) Emergency response procedures that provide an organized immediate action plan for alerting and protecting operating personnel, contractor personnel, the public, and abatement of the release.

(B) Warning System Response. When H_2S is detected in excess of 10 ppm, all nonessential personnel shall be moved to a safe area and essential personnel (i.e., those necessary to maintain control of the well, purpose of rescue, and abatement of the release) shall wear SCBA protective breathing equipment to abate or eliminate the release.

(b) The following minimum safety equipment and procedures shall be provided and operational on site when H_2S has been detected above 10 PPM on location and personnel must perform continuous work in a H_2S environment greater than 10 PPM.

(i) Thirty (30) minute (or greater) Self-Contained Breathing Apparatus (SCBA) especially designed for use in H_2S shall be available on location for each essential personnel for purpose of rescue and abatement of the release.

(ii) Fixed H_2S atmospheric monitoring systems that includes visual and audible alarm(s), shall be set at 10 ppm. H_2S monitors shall have one or more sensors located on the rig floor near the wellbore, preferably on the downwind side. One or more sensors shall be installed in the area of the surface pit(s), where well fluids are flowed to a surface pit. Completion, work-over, and well servicing operations requiring the use of circulation fluids shall include sensors at the return line and above open circulation fluid tanks.

(iii) Supplied Air Respirators (SAR) connected to a cascade system with an emergency escape cylinder supplying five (5) minutes minimum breathing air for each essential personnel.

(iv) An H_2S contingency Plan shall be developed and established for each specific site location to include the following:

(A) Emergency response procedures that provide an organized immediate action plan for alerting and protecting operating personnel, contractor personnel, the public and abatement of the release.

(B) Warning System Response. When H_2S is detected in excess of 10 ppm, all nonessential personnel shall be moved to a safe area and essential personnel (i.e., those necessary to maintain control of the well, purpose of rescue, and abatement of the release) shall wear SCBA or SAR with cascade system protective breathing equipment.

(c) No employee shall be permitted on location without H_2S safety training, except employees may be permitted on location for H_2S training purposes.

(d) Two (2) means of egress on each location shall be provided.

(e) Two (2) wind socks or streamers shall be visible from all points on location.

(f) Signs shall be posted within 500 feet from the location, where possible, on each road leading to the location warning of the hazard of H_2S.

Section 2. Employee Instructions.

(a) Employees shall be instructed in the use of H_2S safety equipment to be provided on site.

(i) The instruction of personnel shall include, as a minimum, the following elements:

(A) The hazards, characteristics, properties, and exposure symptoms of H_2S and sulfur dioxide (SO_2).

(B) Proper first-aid procedures to be used in a H_2S knock-down.

(C) Use of personal protective equipment.

(D) Use and operation of all H_2S monitoring systems.

(E) Corrective action and shutdown procedures.

(F) H_2S training shall be completed annually.

(ii) H_2S safety instruction shall be given by a qualified person(s).

(iii) All H^2S safety equipment shall be checked to assure readiness at least daily.

(iv) All monitoring equipment using manufacturer's recommendations, shall be calibrated by qualified individuals.

CHAPTER 10

ACQUISITION OF REFERENCED STANDARDS

Section 1. Standards Producing Organizations.

(a) The National Consensus Standards defined in Chapter I of these rules and regulations may be obtained from the organizations listed below:

(i) American National Standards Institute (ANSI); 11 West 42nd Street; New York, NY. 10036.

(ii) American Society of Mechanical Engineers (ASME); United Engineering Center; 345 E. 47th St.; New York, NY 10017.

(iii) Society of Automotive Engineers, Inc. (SAE); 485 Lexington Avenue; New York, NY 10022.

(iv) Institute of Makers of Explosives (IME); 420 Lexington Ave.; New York, NY 10017.

(v) American Welding Society (AWS); 550 NW LeJuene Road, PO Box 351040, Miami, FL 33135.

(vi) American Petroleum Institute (API) 1220 L Street, N.W., Washington, D.C. 20005.

Section 2. Sources of Rules and Regulations.

(a) These rules and regulations have been compiled utilizing excerpts from and references to the following sources:

(i) ANSI A11.1-1970 Practice for Industrial Lighting.

(ii) ANSI B31.1.0-1967 Power Piping.

(iii) ANSI C1(Rev. of 1971) National Electrical Code.

(iv) AWS D1.0-66 Welding in Building Construction.

(v) ANSI Z21.30-1964 Installation of Gas Appliances and Gas Piping.

(vi) ASME Boiler and Pressure Vessel Code (1971).

(vii) NFPA No. 30 (1972) Flammable and Combustible Liquids Code.

(viii) API Recommended Practice 49 Recommended Practice for Drilling and Well Servicing Operations involving Hydrogen Sulfide, current edition.

(ix) API Recommended Practices 54 Recommended Practices for Occupational Safety for Oil and Gas Drilling and Servicing Operations, current edition.

OCCUPATIONAL HEALTH AND SAFETY
RULES AND REGULATIONS
OIL AND GAS WELL SERVICING

CHAPTER 1

GENERAL

Section 1. Authority Purpose and Scope

(a) The Occupational Health and Safety Commission is empowered by *27-11-105, Wyoming Statutes*, to devise, formulate, adopt, amend and repeal rules and regulations governing the health and safety of employees and employers covered by the Act.

Section 2. Definitions

(a) As used in these rules and regulations, unless the context clearly requires otherwise:

(i)"Act" means the State of Wyoming Occupational Health and Safety Act, as amended 1992.

(ii)"Administrator" means the Administrator of the ~~Workers Safety and Compensation Division.~~ Department of Workforce Services – OSHA Division.

(iii)"ANSI" means American National Standards Institute.

(iv)"Approved" means sanctioned, endorsed, accredited, certified, or accepted by a duly constituted and recognized authority or agency.

(v)"ASTM" means American Society or Testing and Materials.

(vi)"ASME" means American Society of Mechanical Engineers.

(vii)"Authorized Person" means a person approved or assigned by the employer to perform a specific type of duty or duties or to be at a specific location or locations at the job site.

(viii)"Combustible liquid" means an liquid having a flashpoint at or above 100° F. (37.8 °C) (See "Flashpoint" Definition-(~~20~~ xx)). Combustible liquids shall be divided into classes as follows:

(A) "Class II liquids" shall include those with flash-points at or above 100°F. (37.8 °C) and be 140 °F. (60 °C.), except any mixture having components with flashpoints of 200

°F. (93.3 °C.) or higher, the volume of which make up 99 percent or more of the total volume of the mixture. Example: Stoddard Solvent, Fuel Oil No. 2.

(B) "Class III liquids" shall include those with flash-points at or above 140 °F. (60 °C.) Class III liquids are subdivided into two sub-classes:

(I) "Class IIIA liquids" shall include those with flashpoints at or above 140 °F. (60°C.) and below 200 °F. (93.3 °C.), except any mixture having components with flashpoints of 200°F. (93.3 degrees C.) or higher, the total volume of which make up 99 percent or more of the total volume of the mixture. Example: Fuel Oil No. 6.

(II) "Class IIIB liquids" shall include those with flashpoints at or above 200°F. (93.3 °C). Example: Ethylene Glycol (Anti-freeze).

(A) When a combustible liquid is heated for use to within 30 °F. (l6.7°C.) of its flashpoint, it shall be handled in accordance with the requirements for the next lower class of liquids.

(ix) "Commission" means the State of Wyoming Occupational Health and Safety Commission.

(x) "Competent Person" means one who is capable of identifying existing and predictable hazards in the surroundings or working conditions which are unsanitary, hazardous or dangerous to employees and who has authorization to take prompt corrective measures to eliminate them or who can recommend directly to persons in authority that such corrective measures be taken.

(xi) "Contractor" means any person and/or employer (see definition of person and/or employer) who contracts all or any part of oil and gas well servicing.

(xii) "Sub-Contractor" means any person and/or employer (see definition of person and/or employer) who contracts to perform any part of oil and gas well servicing from a contractor.

(xiii) "Defect" means any characteristic or condition which tends to weaken or reduce the strength of a tool, object or structure of which it is a part, beyond the recognized operating limitations of the tool, object or structure.

(xiv) "Department" means the ~~Department of Employment.~~ Department of Workforce Services.

(xv) "Employee" means a person permitted to work by an employer in employment for wages, salary or commission.

(xvi) "Employer" means any individual or organization including the State and all its

political subdivisions which has in its employ one or more individuals performing services for it in employment.

(xvii) "Employment" means all services for pay under a contract for hire.

(xviii) "Established Federal Standard" means any operative standard established by *Public Law 91-596, the Williams-Steiger Act*, which applies to all business, including the Oil and Gas Well Servicing Industry, in effect on or before date of promulgation of these rules and regulations.

(xix) "Flammable Liquid" means any liquid having a flashpoint below 100°F. (37.8 °C.), except any mixture having components with flash-points of 100 °F. (37.8°C.) or higher, the total of which make up 99 percent or more of the total volume of the mixture. Flammable liquids shall be known as Class I liquids. Class I liquids are divided into three classes as follows:

(A) Class IA shall include liquids having flashpoints below 73°F. (22.8°C.) and having a boiling point below 1O0°F. (37.8 °C.). Example: LPG.

(B) Class IB shall include liquids having flashpoints below 73°F. (22.8°C.) and having a boiling point at or above 100 °F. (37.8°C.). Example: Acetone, Methyl Ethyl Ketone.

(C) Class IC shall include liquids having flashpoints at or above 73°F. (22.8°C.) and below 100°F. (37.8 °C.). Example: Turpentine.

(xx) "Flashpoint" means the minimum temperature at which a liquid gives off vapor within a test vessel in sufficient concentration to form an ignitable mixture with air near the surface of the liquid and shall be determined as follows:

(A) For a liquid which has a viscosity of less than 45 SUS at l00°F. (37.80 °C.), does not contain suspended solids, and does not have a tendency to form a surface film while under test, the procedure specified in the *Standard Method of Test for Flashpoint by Tag Closed Tester (ASTM D-56-70)* shall be used.

(B) For a liquid which has a viscosity of 45 SUS or more at l00°F. (37.8°C.), or contains suspended solids or has a tendency to form a surface film while under test, the *Standard Method of Test for Flashpoint by Pensky-Martens Closed Tester (ASTM D-93-71)* shall be used, except that the methods specified in *Note 1 to Section 1.1 of ASTM D-93-71* may be used for the respective materials specified in the Note.

(C) For a liquid that is a mixture of compounds that have different volatilities and flashpoints, its flashpoint shall be determined by using the procedure specified in paragraph (20) (A) or (B) of this section on the liquid in the form it is shipped. If the flashpoint, as determined by this test, is l00°F (37.8°C.) or higher, an additional flashpoint determination shall be run on a sample

of the liquid evaporated to 90 percent of its original volume, and the lower value of the two tests shall be considered the flashpoint of the material.

(D) Organic peroxides, which undergo auto accelerating thermal decomposition, are excluded from any of the flashpoint determination methods specified in this subparagraph.

(xxi) "Full body harness" means straps which may be secured about a person in a manner that will distribute the fall arrest forces over at least the thighs, pelvis, waist, chest, and shoulder, with means for attaching it to other components of a personal fall arrest system.

(xxii) "Guarded" means covered, shielded, fenced, enclosed, or otherwise protected by means of suitable covers or casings, barrier rails, safety bars, or screens, to eliminate the possibility of accidental contact with, or dangerous approach by, persons or objects.

(xxiii) "Hazard" means any occupational condition or circumstance which is likely to cause death, injury or illness.

(xxiv) "Hazardous Substance" means a substance which, by reason of being explosive, flammable, poisonous, corrosive, oxidizing, irritating or otherwise harmful, is likely to cause occupational death, injury or illness.

(xxv) "Hospitalization" means admitted to the hospital for treatment for a period of twenty-four (24) hours or more.

(xxvi) "Incipient Stage Fire" means a fire which is in the initial or beginning stage and which can be controlled or extinguished by portable fire extinguishers.

(xxvii) "Lower Explosive Limit" (LEL) means the lower limit of flammability of gas or vapor at ordinary ambient temperatures expressed by a percentage of gas or vapor in air by volume. This limit is assumed constant for temperatures up to 250°F (120°C) above this; it should be decreased by a factor of 0.7, because explosibility increases with higher temperatures.

(xxviii) "Lower Explosive Limit (LEL) Monitor" means an instrument that measures the LEL of flammable gases.

(xxiv) "Moving Parts" means gears, sprockets, revolving shafts, clutches, belts, pulleys, or other revolving or reciprocating parts that are attached to, or form an integral part of a machine.

(xxx) "National Consensus Standard" means any standard or modification thereof which:

(A) Has been adopted and promulgated by any nationally recognized standards-producing organization under procedures whereby it can be determined by the Secretary of

Labor or by the Assistant Secretary of Labor that persons interested and affected by the scope or provisions of the standard have reached substantial agreement on its adoption;

(B) Was formulated in a manner which afforded an opportunity for diverse views to be considered; an

(C) Has been designated as such a standard by the Secretary or the Assistant Secretary, after consultation with other appropriate Federal agencies.

(xxxi) "Person" means an individual, governmental agency, partnership, association, corporation, business, trust, receiver, trustee, legal representative or successor to any of the foregoing.

(xxxii) “Personal fall arrest system” means a system used to arrest an employee in a fall from a working level. It consists of an anchorage, connectors, a body harness, and may include a lanyard, deceleration device, lifeline, or suitable combinations of these.

(xxxiii) "Place of Employment" means plant, premises, or any other place where directed by the employer or about which an employee is permitted to work.

(xxxiv) "Power Transmission" means equipment such as shafting, gears, belts, pulleys, or other parts used for transmitting power to the machine.

(xxxv) "Qualified" means one who by possession of a recognized degree, certificate, or professional standing, or who by extensive knowledge, training and experience has successfully demonstrated ability to solve or resolve problems relating to the subject matter, the work or the project.

(xxxvi) "Safety Factor" means the ratio of the ultimate breaking strength of a member or piece of material or equipment to the actual working stress .

(xxxvii) "Secretary" means the Secretary of the U. S. Department of Labor.

(A) May be referred to as the Assistant Secretary.

(xxxviii) "Shall" means mandatory.

(xxxix) "Should" means recommended.

(xl) "Standard" means a standard which requires conditions, or the adoption or use of one or more practices, means, methods, operations or processes reasonably necessary or appropriate to provide safe or healthful employment and places of employment in the Oil and Gas Well

Servicing Industry.

(xli) "Suitable" means that which fits, and has the qualities or qualifications to meet a given purpose, occasion, condition, function or circumstance.

(xlii) “Suitable anchor “ means that it is capable of supporting at least 5,000 pounds per employee attached or shall be designed, installed, and used as follows: (i) as part of a complete personal fall arrest system which maintains a safety factor of at least two; and (ii) under the supervision of a qualified person.

(xliii) "Supervisor" means a person who has been given the control, direction and/or supervision of work performed by one or more employees.

(xliv) “Tugger line” means a wire rope powered by a winch and used for the controlled moving of light loads around a rig.

(xlv) "Variances" means exception to promulgated standards, rules and regulations. As stated in the *Act 27-11-111--Variances, "Any person affected by this Act may request a variance to any standard, rule or regulation promulgated under this Act."*

(xlvi) "Well" means a hole in the ground:

(A) made, or being made, by drilling, boring, or in any other manner, and from which oil or gas is obtained, or is obtainable; or is for the purpose of attempting to obtain oil or gas;

(B) made or being made, by drilling or boring for the purpose of obtaining water to inject to an underground formation;

(C) used, drilled or being drilled for the purpose of injecting gas, air, water or other substance to an underground formation;

(D) which is a test-hole, excluding seismic drilling; or

(E) drilled, or being drilled, for any other purpose than listed above using equipment and machinery normally used for oil and gas well servicing.

(xlvii) "Well Operator" means an individual or organization who has the responsibility, management, and general control of an oil or gas well as lessee, sub-lessee, owner or assignee.

(xlviii) "Well servicing" means any action or work other than the original drilling of the well, related, but not limited to, the completion, recompletion, down hole maintenance, or

termination of the well.

Section 3. Petition for Promulgation, Amendment or Repeal of Rules and Regulations.

Any interested person may petition, in writing, the Department or Commission requesting the promulgation, amendment or repeal of any rules and regulations and may accompany his petition with relevant data, views and arguments. The Department or Commission may prescribe by rule the form of such petition and the procedure for their [its] submission, consideration and disposition. Upon submission of such a petition, the Commission, as soon as practicable, either shall deny the petition in writing (stating its reason for the denial) or initiate rule-making proceedings in accordance with 16-3-103, Wyoming Statutes. The action of the Commission in denying a petition shall be final and not subject to review.

Section 4. Amendments of Rules and Regulations.

(a) The Commission shall have the authority under Section 27-11-105 (b) (ii) of the Act, to devise, formulate, adopt, amend and repeal rules and regulations promulgated under the Act.

(b) In the event of conflict among any such standards, the Commission shall take the action necessary to eliminate the conflict, including the amendment or revocation of a rule or regulation, so as to assure the greatest protection of the health and safety of the employees and employers affected by the Act.

Section 5. Applicability of Rules and Regulations

(a) These rules and regulations as well as the requirements contained in the State of Wyoming Occupational Health and Safety 1910-General Rules and Regulations and those parts of 1926-Construction which apply to site clearing, rig erection and rig dismantling shall apply to all businesses and industries, employers and employees on the job site.(b) If a particular requirement contained herein is specifically applicable to a condition, practice, means, method, operation or process it shall prevail over any different general rule or regulation which might otherwise be applicable to the same condition, practice, means, method, operation or process.

NOTE: It has been determined by the Wyoming Occupational Health and Safety Commission that a servicing unit which is performing drilling operations is subject to the Wyoming Occupational Health and Safety Rules and Regulations for Oil and Gas Well Drilling.

Section 6. Incorporation by Reference.

(a) The standards, rules and regulations of the U. S. Government, National Fire Protection Association, American National Standards Institute and other organizations which are not agencies of the State of Wyoming which are legally incorporated by reference in these rules and regulations

shall have the same force and effect as these rules and regulations for Oil and Gas Well Servicing.

(b) Copies of the standards, rules and regulations which are incorporated by reference may be examined at the office of, ~~Workers' Safety and Compensation,~~ Department of Workforce Services – OSHA Division, in Cheyenne, Wyoming. Copies of such private standards, rules or regulations may be obtained from the issuing organizations. Their names and addresses are listed in these rules and regulations.

(c) Any changes in the standards, rules or regulations incorporated by reference in these rules and regulations and an official historic file of such changes are available for inspection at the office of, ~~Workers' Safety and Compensation,~~ Department of Workforce Services – OSHA Division, in Cheyenne, Wyoming.

CHAPTER 2

ADOPTION AND EXTENSION OF ESTABLISHED RULES AND REGULATIONS

Section 1. Scope and Purpose.

The Commission shall devise, formulate, adopt, amend and repeal rules and regulations as provided by the Act as deemed necessary and advisable for the protection of every employer, employee and employment in the Oil and Gas Well Servicing Industry.

Section 2. Effective Dates.

These rules and regulations and any changes to standards, rules and regulations become effective upon their filing with the Wyoming Secretary of State, in accordance with Wyoming statutes pertaining to rulemaking procedure.

CHAPTER 3

GENERAL HEALTH AND SAFETY PROVISIONS

Section 1. General Rules for Well Operators, Employees, Contractors and Sub-Contractors.

(a) Each well operator, employer, employee, contractor and subcontractor shall be charged with the responsibilities and duties as required by the Act, the Rules of Practice a Procedure, the Rules and Regulations (General), the Rules and Regulations for Construction, and these rules and regulations as they relate to the machinery, tools, materials or equipment and to the employees of each of them as applicable.

NOTE: It has been determined by the Wyoming Occupational Health and Safety Commission that a servicing unit which is performing drilling operations is subject to the Wyoming Occupational Health and Safety Rules and Regulations for Oil and Gas Well Drilling.

(b) Accident prevention responsibilities:

(i) It shall be the responsibility of the employer to initiate and maintain such programs as may be necessary to comply with these rules and regulations.

(ii) Such programs shall provide for inspections of the establishment, materials and equipment. These inspections shall be performed by competent persons designated by the employer.

(iii) The employer shall prohibit the use of any machinery, tool, material or equipment which he knows, or reasonably should know, is not in compliance with any applicable requirement of these rules and regulations. Such machine, tool, material or equipment shall either be identified as unsafe by locking the controls to render them inoperable or shall be physically removed from its place of operation.

(iv) The employer shall permit only authorized persons, or employees being trained under the supervision of a qualified person(s), to operate equipment or machinery.

(c) No employer for any part of the operation covered by these rules and regulations shall require any employee to work in surroundings or under working conditions which are unsanitary, hazardous, or dangerous to his health or safety, beyond the normal hazards inherent in his job.

(d) Any two or more employers who have employees at one jobsite (such as prime contractors and sub-contractors) may make their own arrangements with respect to obligations which might be more appropriately treated on a job site basis rather than individually. Thus, for example, the prime contractor and his sub-contractors may wish to make an agreement that the prime

contractor or one of the sub-contractors will provide all required first-aid or toilet facilities, thus relieving the sub-contractors from the actual, but not from the legal responsibility (or, as the case may be, relieving the other subcontractors from this responsibility.)

(e) The well operator shall be responsible for furnishing the general and specific well prognosis and plans, and will provide contractor and employers with all available information concerning observed pressure conditions, hazardous fluids, and well conditions which may be encountered in the servicing operations to the best of the well operator's knowledge.

(f) No person shall cause the servicing work to commence until the contractor or sub-contractor, as appropriate, has declared his equipment and employees are safely prepared to proceed.

(g) No person shall require any modifications to be made or cause auxiliary equipment to be installed which are in conflict with these rules and regulations.

Section 2. Safety Training and Education.

(a) Education and training of employees in the recognition, avoidance and prevention of unsafe conditions in employments covered by these rules and regulations shall be given.

(b) Each employee shall be instructed in the recognition and avoidance of unsafe conditions and the rules and regulations applicable to his work environment to control or eliminate any occupational hazards or other exposure to illness or injury.

(c) Employees required to handle or use poisons, corrosives and other harmful substances shall be instructed regarding the safe handling and use, and be made aware of the potential hazards, personal hygiene and personal protective measures required.

(d) In job site areas where harmful plant or animals are present, employees who may be exposed shall be instructed regarding the potential hazards, how to avoid injury, and the first aid procedures to be used in the event of injury or illness.

(e) Employees required to handle or use flammable liquids, gases or toxic materials shall be instructed in the safe handling and use of these materials and made aware of the specific requirements contained in *Subpart G and Subpart H and other applicable subparts of the State of Wyoming Occupational Health and Safety 1910-General Rules and Regulations*.

(f) All employees required to enter into confined or enclosed spaces shall be instructed as to the nature of the hazards involved, the necessary precautions to be taken, and in the use of protective and emergency equipment required. The employer shall comply with any specific regulations that apply to work in dangerous or potentially dangerous areas.

(g) For purpose of this paragraph, “confined or enclosed space" means any space having a

limited means of egress, which is subject to the accumulation of toxic or flammable contaminants or has an oxygen deficient atmosphere. Confined or enclosed spaces include, but are not limited to, storage tanks, process vessels, bins, boilers, ventilation or exhaust ducts, sewers, underground utility vaults, tunnels, pipelines and open top spaces more than four (4) feet in depth such as pits, tubs, vaults and vessels.

(h) All training required by these rules and regulations shall be documented.

Section 3. Acceptable Inspections

(a) Pressure vessels. Valid inspection by an insurance company or regulatory authority shall be deemed as acceptable evidence of safe installation, inspection and testing of pressure vessels provided by the employer.

(b) Boilers. Boilers provided by the employer shall be deemed to be in compliance with these requirements when evidence of current and valid certification by an insurance company or regulatory authority attesting to the safe installation, inspect on and testing is presented.

(c) Other requirements. Regulations prescribing specific requirements for other types of pressure vessels and similar equipment are contained in *Subpart M of the State of Wyoming Occupational Health and Safety 1910-General Rules and Regulations*.

CHAPTER 4

PERSONAL PROTECTIVE EQUIPMENT

Section 1. Head Protection

(a) An approved helmet (safety hard hat) shall be required to be worn by all employees within working areas with the exception of self-contained areas such as truck cabs and field offices.

(b) An approved helmet (safety hard hat), meeting the requirements and specifications of the *American National Standard Safety Requirements for Industrial Head Protection, ANSI Z89.1-~~1986~~ Current Edition*, shall be required to be worn by all employees at any time there is danger of being struck by falling objects, or when required to be worn by other applicable rules and regulations.

Section 2. Eye and Face Protection

(a) Protective eye and face equipment shall be required where there is a potential of injury that can be prevented by such equipment. In such cases, employers shall require the use of a type of protector suitable for the work to be performed. No unprotected person shall knowingly be subjected to a hazardous environmental condition. Suitable eye protectors shall be required by the employer where machines or operations present the hazard of flying objects, glare, liquids, injurious radiation or a combination of these hazards.

(b) Protectors shall meet the following minimum requirements:

(i) They shall provide protection against the particular hazards for which they are designed.

(A) Safety glasses shall be the wrap around type or with side shields.

(ii) They shall be reasonably comfortable when worn under the designated conditions.

(iii) They shall fit snugly and shall not unduly interfere with the movements of the wearer.

(iv) They shall be durable.

(v) They shall be capable of being disinfected.

(vi) They shall be easily cleanable.

(vii) Protectors shall be kept clean and in good repair.

(c) Employees whose vision requires the use of corrective lenses in spectacles, and who are required by these rules and regulations to wear eye protection, shall be required to wear goggles or spectacles of one of the following types:

(i) Spectacles whose protective lenses provide optical correction.

(ii) Goggles that can be worn over corrective spectacles without disturbing the adjustment of the spectacles.

(iii) Goggles that incorporate corrective lenses mounted behind the protective lenses.

(d) Every protector shall be distinctly marked to facilitate identification of the manufacturer.

(e) When limitations or precautions are indicated by the manufacturer, they shall be transmitted to the user and care taken to see that such limitations and precautions are strictly observed.

(f) Design, construction, testing and use of devices for eye and face protection shall be in accordance with *American National Standard for Occupational and Educational Eye and Face Protection, Z87.1-~~1989~~ Current Edition.*

Section 3. Occupational Foot Protection.

(a) Safety shoes or safety boots shall be required to be worn in the working area.

(b) Metatarsal guards should be required as additional protection where the danger of a crushing injury to the arch of the foot exists.

(c) Safety-toe footwear for employees shall meet the requirements and specifications in ~~*American National Standard for Men's Safety-Toe Footwear, Z41.1-1991*~~ *American Society for Testing and Materials (ASTM) F-2412-Current Edition "Standard Test Methods for Foot Protection," and ASTM F-2413-Current Edition, "Standard Specification for Performance Requirements for Protective Footwear,".*

Section 4. General.

(a) Unreasonable loose, poorly fitted or torn clothing shall not be worn.

(b) Clothing which has been saturated with flammable or toxic substances shall be immediately removed, and the affected skin area thoroughly washed.

(c) Hazardous jewelry, such as finger rings, chain bracelets, etc., shall not be worn. This is

not intended to include wristwatches equipped with bands which will easily break.

(d) Hair of such length that it may become entangle in moving or rotating machinery shall be contained in a suitable manner. Beards and sideburns of employees shall be kept in such condition and of such length so as not to interfere with the proper and efficient use of gas masks, air masks or other safety apparel or equipment.

(e) ~~Where special circumstances warrant, or w~~ Where these rules and regulations prescribe the use of body harnesses:

(i) An approved full body harness, provided by the employer, suitable for the particular job or hazard exposure, shall be worn and shall be attached by means of a personal fall arrest system to a suitable anchor and adjusted to allow a minimum drop~~, in case no case greater than six (6) feet~~. Every person, when engaged in work at ~~six (6)~~ four (4) feet or more above the derrick floor or other working surfaces, shall wear a body harness with an attached safety line secured to a suitable anchor (when it is feasible and does not create a greater hazard).

(ii) A separate life line shall be provided for each employee exposed to the particular job or hazard.

(iii) Personal fall arrest system components (ie: anchorage, connectors, full body harness, etc.) shall be inspected prior to each use and shall be repaired or replaced if found to be defective.

(f) Flame Resistant Clothing (FRC) shall be worn by all employees on the well servicing site location within 120 feet of the well or well bore once the well bore is open, with the exception of self-contained areas (such as truck cabs and field offices) and employees changing into or out of the FRC garments.

(i) Flame Resistant Clothing (FRC) for employees shall meet the requirements and specifications of *NFPA 2112 Standard on Flame-Resistant Garments for Protection of Industrial Personnel Against Flash Fire, Current Edition, and NFPA 2113 Standard on Selection, Care, Use, and Maintenance of Flame-Resistant Garments for Protection of Industrial Personnel Against Flash Fire, Current Edition.*

(ii) A sign shall be conspicuously displayed at the beginning of all entrances to the well locations stating “Flame Resistant Clothing (FRC) is required to be worn”.

(~~f~~ g) Special protective wearing apparel shall be provided and worn as deemed necessary because of an unusually hazardous situation not normal to the job.

Section 5. Emergency Equipment.

(a) The well operator shall advise the servicing organization of any area which has or may contain insufficient oxygen or has been or may be contaminated by flammable or toxic gases, vapors or dust. The employer shall ensure that servicing is not performed until sufficient tests have been made with appropriate instruments or equipment to determine extent of hazard. If a hazard exists the area must be purged to reduce the hazard to an allowable concentration, or all employees shall be provided with proper protective equipment.

(i) In the event of the presence of Hydrogen Sulfide (H_2S) ~~(hydrogen sulfide)~~ the following limits of exposure shall apply:

(A) Ceiling value = 10 ppm.

(B) Time weighted average (TWA) = 10 ppm

(C) Acceptable maximum peak above the acceptable ceiling concentration for an eight (8)hour shift = 50 ppm. (10 minutes once only if no other measurable exposure occurs.)

(ii) Self-contained breathing equipment especially designed for use in H_2S shall be available on location for each ~~on-duty person~~ essential personnel, when working in a known or suspected H_2S environment.

(iii) Equipment to purge area shall be available on location, in position to be used during the period the well is being worked on or as long as there is a possibility of escape of gas in amounts to be harmful.

(iv) Blower used for ventilation shall be a non-sparking type.

(b) In the case of toxic atmosphere or lack of oxygen, any employee entering such area shall be required to use the proper respiratory equipment.

(c) In addition, any employee entering such atmospheres as specified in 5.(b) of this section, shall be required to wear a body harness with attached life line for emergency retrieval. An employee shall be stationed outside the hazard area with the proper rescue equipment to assist in case of emergency, and to attend to the retrieval of the life line.

(d) Canister-type filter masks shall be used only in an area where sufficient oxygen exists (at least nineteen and a half (19.5) ~~16~~ percent by volume).

(i) Canister-type filter masks shall be used only in areas where their capabilities will not be exceeded. Such canisters shall be approved for the hazardous contaminant.

(e) In those atmospheres where tests indicate oxygen content is less than that necessary to sustain life (~~normally considered~~ nineteen and a half (19.5) ~~16~~ percent oxygen by volume),

employees shall be provided with and required to use self-contained ~~respirators (air packs)~~ breathing apparatus (SCBA); or

(f) Supplied-air ~~respirators~~ breathing apparatus may be used instead of ~~self-contained respirators~~ SCBA in subsection e. of this section. In the event supplied-air ~~respirators~~ breathing apparatus are used, they shall be selected, used and maintained in accordance with *1910.134 - Respiratory Protection, of the Wyoming Occupational Health and Safety 1910-General Rules*.

(g) All respirators on work locations shall be:

(i) Housed in a proper cabinet or other appropriate container located close to, but not within, the potential area of use;

(ii) Inspected at least monthly and documented for constant service readiness; except, if rented, prior to each use, but at least monthly.

Note: Caution should be observed when using ~~self-contained respirators (airpacks)~~ SCBA at low temperatures due to pressure drop.

(iii) Serviced and brought back to readiness after each usage.

(h) All employees shall be trained in the use and operation of employer provided breathing equipment available on the job and employees whose facial contours, physical impairments, hair or beard styles that would interfere with the seal necessary for respiratory protective devices, shall not enter areas in which such protection devices may be necessary.

(i) ~~A poster shall be conspicuously displayed at or near all radios and/or radio phones stating the phone numbers of available doctors, hospitals, and ambulance services. In lieu of the posting requirement herein, the base station shall have such information on hand and the base station be constantly attended during all working hours, and all unit-to-base radios in the field have a conspicuous label stating: "In an emergency, contact the base station", or similar wording.~~ The well operator, prior to commencement of work in an area, shall provide provisions for contacting emergency medical services in case of serious injury.

(i) No servicing unit shall be rigged up on a work site until the emergency medical service communications has been established and tested.

(ii) A poster shall be fastened at or near emergency communications devices plainly stating the phone numbers of emergency medical services within the district of the work site.

(j) A first aid kit (not less than ~~sixteen (16)~~ twenty four (24) unit type) shall be maintained at the servicing site and inspected at frequent intervals. The first aid kit shall be replenished after each major usage and shall be kept in a sanitary and usable condition.

(i) First aid station(s) shall be located as close as practicable to the highest concentration of personnel.

(ii) First aid stations shall be well marked and available to personnel during all working hours.

(iii) One person holding a valid first aid certificate shall be responsible for the proper use and maintenance of the first-aid stations(s).

(iv) A "unit" is defined as a package, bottle or other container which contains a specific item of first-aid material. For example, a bottle of hydrogen peroxide, a box of adhesive bandages, a box with a roll of gauze bandage, etc.

(v) In addition to the first-aid kit which must be kept on the equipment or at the place of work, there shall be available within the closest practicable distance from the operations (not to exceed five (5) minutes) the following items:

(A) ~~One (1) set of arm and leg splints;~~ Two (2) adjustable medical splints; one (1) arm, one (1) leg;

(B) Two (2) all wool blankets or blankets equal in strength and fire resistance.

(k) One (1) or more employees on each servicing unit shall be adequately trained to render first aid and cardiopulmonary resuscitation (CPR), and shall have a valid certificate from the American Red Cross or equivalent training that can be verified by documentary evidence and who will always be present.

(l) ~~Where harmful chemicals are being used, readily accessible facilities shall be available for rapid flushing of the eyes and/or skin areas.~~ Where the eyes or body of personnel may be exposed to injurious materials, eyewash equipment for emergency use shall be provided. For information on emergency eyewash and shower equipment see, A*merican National Standard Institute (ANSI) Z358.1-Current Edition.*

(m) Toilet facilities. [Reserved]

Section 6. Fire Prevention and Protection.

(a) Firefighting equipment shall not be tampered with and shall not be removed for other than the intended purpose.

(b) Fire extinguishers and other firefighting equipment shall be suitable located and plainly labeled as to their type and method of operation.

(c) Combustible waste material and residues shall be kept to a minimum, stored in covered metal receptacles and disposed of daily.

(d) Access to exits or fire extinguishers shall not be blocked or obscured by clothing, materials or equipment.

(e) Portable extinguishers shall be maintained in a fully charged and operable condition, and kept in their designated places at all times when they are not being used.

(f) All fire extinguishers shall be maintained, inspected, and hydrostatically tested in accordance with *1910.157 of the Wyoming Occupational Health and Safety 1910-General Rules.*

(g) Every well servicing unit shall have ~~two (2)~~ four (4) non-freeze type ~~30~~ twenty (20) pound B:C (or equivalent) rated fire extinguishers, approved by a nationally recognized testing laboratory. The above is minimum and many occasions may warrant more equipment of a larger scale.

(i) All servicing unit crew at the rig site will be trained in the proper use of a multi-purpose fire extinguisher annually to control or extinguish incipient stage fires.

(h) Carbon tetrachloride extinguishers are not permitted.

(i) Every welding operation shall have a suitable extinguisher available.

(j) Extreme caution shall be used with open flames around oil and gas operations.

(k) Natural or liquefied petroleum gas (LPG) shall not be used to operate spray guns or other pneumatic equipment.

(l) There shall be no smoking on location within 120 feet of well bore or any other flammable substances. All persons shall leave all smoking materials, such as cigarettes, cigars, pipes, matches, and lighters in their vehicles or change rooms, so as to prevent anyone from inadvertently smoking on location. Any engine being refueled shall be shut off during refueling.

(m) There shall be a least two (2) "No Smoking" signs conspicuously displayed at each well location while there is well service work in progress. Signs shall be constructed in accordance with *1910.145, Wyoming Occupational Health and Safety 1910-General Rules and Regulations.*

(n) ~~No open flames shall be permitted within 120 feet from the well or well bore if hydrocarbons or other volatile substances are in the well. Welding operations~~ Grinding, welding, cutting, and brazing or open flame within 120 feet of the well or well bore shall require a written hot work permit in accordance with Chapter 5 section 11. Grinding, welding, cutting, and brazing more than 120 feet from the well or well bore shall be conducted in accordance with *1910.252.d. of the*

Wyoming Occupational Health and Safety 1910-General Rules and Regulations.

Section 7. Flammable Liquid Handling and Storage. (Flashpoint Less 100°F.)

(a) Only approved containers or approved safety containers shall be used as containers of flammable liquids having a flashpoint lower than 100°F., such as gasoline, naphtha, etc.

(b) Liquefied Petroleum Gas (LPG) shall be handled in accordance with *Subpart H, Wyoming Occupational Health and Safety 1910-General Rules and Regulations*, in all operations.

(c) An electrical bond shall be maintained between containers when a flammable liquid is being transferred from one to the other.

(d) Discharge nozzles and valves shall be of the quick, self-closing type.

(e) ~~No open flames or welding operations shall be allowed in a flammable material storage area, except as provided in *1910.252 d. of the Wyoming Occupational Health and Safety 1910-General Rules and Regulations.*~~ Open flames or grinding, welding, cutting, and brazing within 120 feet of a flammable material storage area shall require a written hot work permit in accordance with Chapter 5 section 11, (a). Open flames or grinding, welding, cutting and brazing more than 120 feet from a flammable storage area shall be performed in compliance with *Subpart Q of the State of Wyoming Occupational Health and Safety 1910 - General Rules and Regulations.*

(f) Proper signs shall adequately designate all flammable storage areas. Signs shall be constructed in accordance with *1910.145, Wyoming Occupational Health and Safety 1910-General Rules and Regulations.*

CHAPTER 5

SAFEGUARDS

Section 1. Working Conditions.

(a) All wells shall be reasonably controlled to the extent that they do not present a fire hazard or an undue health or injury hazard to the employee. Work on or near a well that is expelling gas, oil, water or combination thereof shall be minimized and then only after all reasonable safety precautions are taken.

(b) The well operator shall be responsible for the overall control of the well. All reasonable methods of well control shall be employed.

(c) The well operator shall ensure that the employer is advised of any known potential hazard.

(d) In the event of a sudden, unexpected expulsion of flammable or toxic material, the work on the well shall be halted and the location and equipment cleaned and/or purged and made safe before work is continued. Other than that required to bring the well under control, there shall be no rod and tubing work performed on wells that are flowing, "kicking", flowing by heads, and/or emitting gas in dangerous quantities. (Reference *Chapter 4, Section 5*. of these rules and regulations.)

(e) Stoves in operation, open fires, etc., shall be extinguished if flammable substances such as oil or gas are near or in the air. (See also, Chapter 5, Section 10. of these rules and regulations).

(f) A mud box shall be utilized on all rigs to convey any fluids away from the working area while pulling wet strings.

(g) In the event that the fluid is coming over top of tubing while pulling and the fluid cannot be swabbed down or circulated with a fluid heavy enough to keep fluid from spilling over, the pipe shall be perforated and the hole circulated until a static condition is reached or an equally effective method utilized to reduce the potential fire or toxic hazard to personnel.

(h) Well cellars, well floors and ground areas adjacent to derricks or tanks shall be kept reasonably free from accumulation of oil which might create or aggravate fire hazards.

Section 2. Machinery Operations, Lockouts, Guarding and Maintenance.

(a) Only the employer-authorized equipment operators shall operate machinery of any kind.

(b) Equipment operators shall be properly trained and judged competent before being

authorized as equipment operators.

(c) Equipment operators shall bring any unsafe condition to the attention of the employer for evaluation inspection and/or correction.

(d) When maintenance or servicing is to be accomplished on power-driven equipment, the immediate source of power to the individual piece of equipment to be worked on shall be locked out. When maintenance or servicing is to be accomplished on electrical lines, air lines, gas lines or other lines containing hazardous materials, the line being worked on shall be rendered safe by emptying, purging, disconnecting or other means before work is begun.

(e) When more than one employee is to work on the same piece of equipment, the employer may designate one employee to be in charge of the lockout procedure.

(f) Safety locks shall not be removed from main power breakers, disconnect switches, or valves until all personnel are in the clear.

(g) All belts, gears, shafts, pulleys, sprockets, spindles, drums, fly wheels, or other reciprocating and rotating parts, with the exception of the cathead, shall be guarded unless they are guarded by location, so positioned to prevent any person from coming in contact therewith. Guarding shall meet the requirements as set forth in *1910.212 & 1910.219 "Machinery and Machine Guarding"*, or the *Wyoming Occupational Health and Safety 1910-General Rules and Regulations*.

(h) Machinery shall not be operated without all guards properly maintained and in position; except during maintenance, repair or rigup work, when limited testing may be performed by a qualified person.

(i) No employee shall clean or lubricate any machinery where there is danger of contact with a moving part until such machinery has been stopped.

(j) Machinery and equipment shall be maintained in such condition as to ensure safe operations and working conditions.

(k) All guards and protective devices shall be replaced, and proper personnel notified when maintenance is complete.

(l) All tools and equipment used by employees shall be in safe condition.

(m) Electric tools shall be grounded by use of approved devices maintained in proper condition, except "Double Insulated" tools may be used in lieu of the grounding requirement.

(n) Electrical or pneumatic hand tools shall have a deadman switch or arranged so that the starting switch will not be locked in.

(o) Tools or other materials shall not be carried up or down a ladder unless properly secured to the body, leaving both hands free for climbing.

(p) Maintenance personnel on a contract basis shall abide by all safety rules and regulations.

(q) Power rod and/or tubing tongs shall not be backed up with pipe wrenches or any other device not able to withstand the full torque of the power tool.

(r) Power-driven rod tongs and tubing tongs with front open for putting on and off shall have front doors working properly.

(s) Power jacks shall have a safety lock device.

(t) Equipment used in winching operations shall be inspected, and maintained in safe operating condition.

(u) All winch lines, anchors, snatch blocks, hooks, clamps and other fittings shall be of suitable size and capacity.

(v) Warning signs shall be posted in areas where toxic, poisonous, flammable, or explosive materials or atmospheres exist.

(w) Warning signs shall be posted to denote any unusual hazardous situation during the existence of such a hazard.

(x) Warning signs shall be posted in areas where the use of personal protective equipment is required.

(y) Identification signs shall be conspicuously posted to locate emergency equipment.

(z) Containers of poisonous, toxic, flammable and/or explosive material shall be properly labeled and approximately stored according to content.

(aa) (For cylinders used in welding, cutting and brazing operations, see Chapter 5, Section 11.). Compressed gas cylinders shall be stored in a well-protected, well-ventilated location, at least 20 feet from combustible materials; assigned storage spaces shall be located where cylinders will not be knocked over or damaged by passing or falling objects, or subject to tampering by unauthorized persons.

(i) Cylinders shall be secured in an upright position; and

(ii) Shall be separated in storage as to full and empty cylinders and shall be separated

as to contents; and

(iii) Shall be handled carefully to prevent dropping; and

(iv) Shall be transported with gauges removed and caps in place.

(bb) No material used for cleaning shall have a flashpoint less than 100°F. Examples of materials which have flashpoints below 100°F. are gasoline, naphtha., etc.

(cc) Signs required in this section shall be constructed in accordance with *1910.145, Wyoming Occupational Health and Safety 1910 General Rules and Regulations.*

Section 3. Footings and Locations.

(a) Foundation bases shall be of the appropriate size for well servicing units in operation on the location and shall be graded and drained. Location sites shall be made and maintained to a grade so that oil, substance from oil, water or other movable fluid will drain from working area. Such foundation bases shall be the responsibility of the well owner or operator.

(b) Footing shall be used as required by the existing conditions to provide a table base for the rig up, including mast erection, to support the mast during the most extreme load that will be encountered, and for pipe racking.

(c) If supplemental footing is used, it must be such that the safe bearing capacity of the soil on location is not exceeded and will carry the most extreme load. Supplemental footing is a foundation base other than cement or solid rock.

(d) Figures 1, 2, and 3, taken in part from *API Standard 4~~E~~ G Recommended Practice for Maintenance and Use of ~~for~~ Drilling and Well Servicing Structures*, shall be used as a reference in preparing locations and repairing existing locations that are sub-standard.

Figure 1

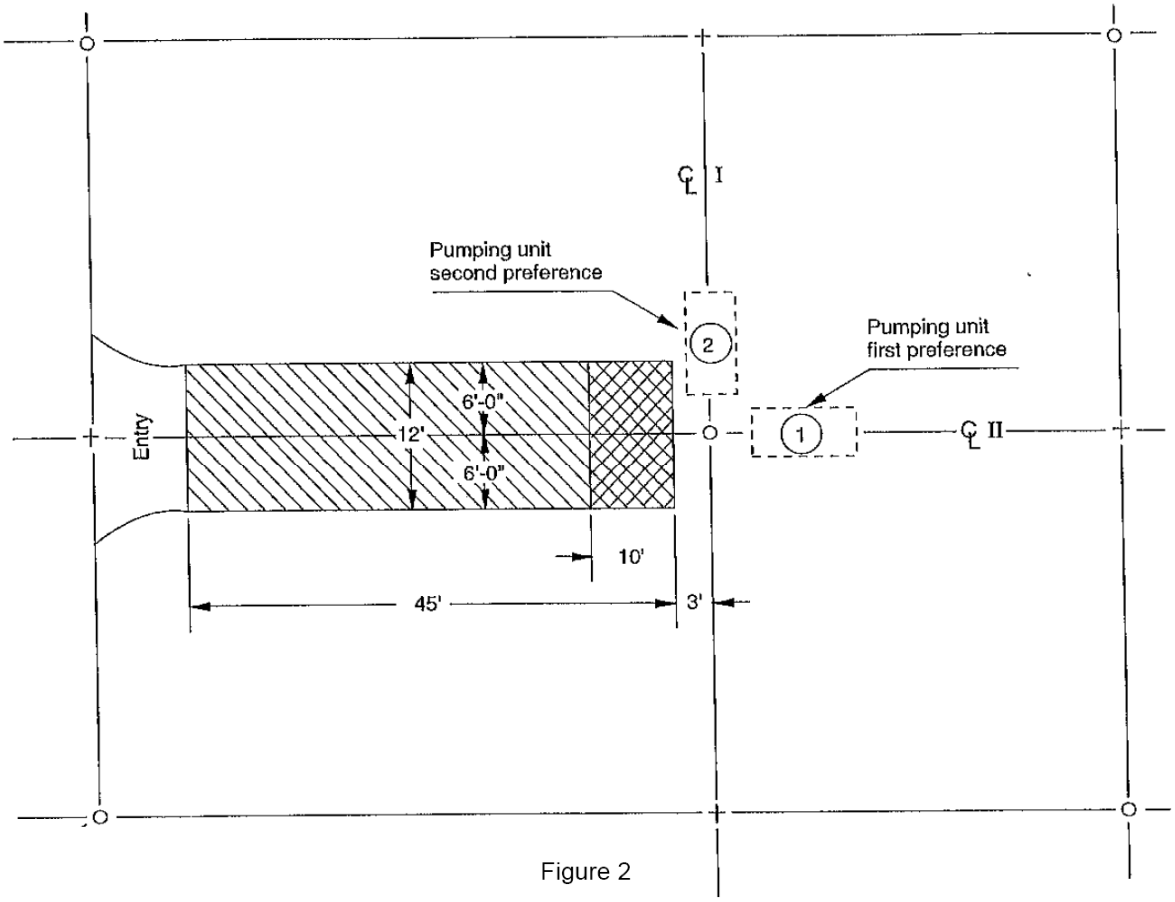

Figure 2

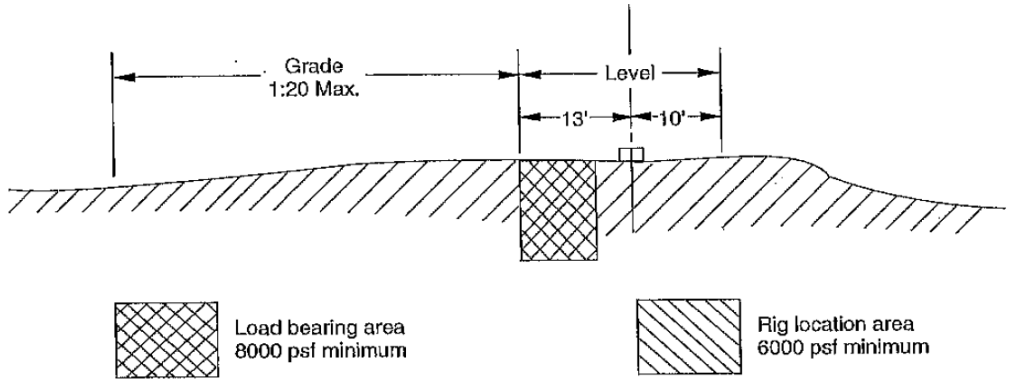

Load bearing area: Compacted sand or gravel requiring picking for removal or better base. Safe bearing capacity desired—min., 8000 psf, level and drained.

Rig location area: May grade away from well along centerline II at max. drop of 1:20. Should be level across grades parallel to centerline I. Safe bearing capacity desired—min., 6000 psf. Allow maneuvering entry for drive in or back in. Drainage of entire area required.

Figure 3

Safe Bearing Capacity of Soils[a]

Soil Type	Bearing Capacity lbf/ft^2 (kPa)
Solid ledge of hard rock, such as granite, trap, etc.	50,000 (2394)
Sound shale and other medium rock requiring blasting for removal	20,000 (958)
Hard pan, cemented sand and gravel difficult to remove by picking	16,000 (766)
Soft rock, disintegrated ledge; in natural ledge, difficult to remove by picking	10,000 (479)
Compact sand and gravel requiring picking for removal	8,000 (383)
Hard clay requiring picking for removal	8,000 (383)
Gravel, coarse sand, in natural thick beds	8,000 (383)
Loose, medium, and coarse sand, fine compact sand	3,000 (144)
Medium clay, stiff but capable of being spaded	4,000 (192)
Fine loose sand	2,000 (96)
Soft clay	Less than 2,000 (96)

[a] Values taken from Marks' Mechanical Engineers' Handbook.

Section 4. Wind Guys.

(a) Four (4) crown-to-ground guys of at least five-eighths (5/8) inch diameter, 6 x 37 class, improved plow steel or steel of higher breaking strength shall be used on every rig up. Exception: This rule does not apply when the manufacturer does not recommend the use of wind guys and the following conditions are met: (1) no one is in the mast during operation, (2) no rod, tubing, etc. is racked in the mast, (3) outriggers are utilized, and (4) the mast height is 60 feet or less.

(b) Two (2) racking boards-to-ground guys of at least nine-sixteenths (9/16) inch diameter, 6 x 37 class, improved plow steel or steel of greater breaking strength shall be used in every rig up where tubing is in the board.

(c) A thorough inspection of all wind guy anchor lines in use shall be made at least once a year, and shall be visually inspected prior to each rig up. All inspections shall be performed by a competent person authorized by the employer to perform such inspection. Wire ropes with any of the following defects shall be removed from service as wind guy anchor lines:

(i) When three (3) broken wires are found in one lay of 6 x 6 wire rope;

(ii) When six (6) broken wires are found in one lay of 6 x 19 wire rope;

(iii) When nine (9) broken wires are found in one lay of 6 x 37 wire rope;

(iv) When eight (8) broken wires are found in one lay of 8 x 19 wire rope;

(v) When wire ropes not described herein are found to have four (4) percent of the total number of wires composing such wire broken in one lay;

(vi) When marked corrosion appears;

(vii) When corroded or broken wires at end connections are noted;

(viii) When end connections are corroded, cracked, bent, worn or improperly applied; or

(ix) When evidence of kinking, crushing, cutting or unstranding are noted.

(d) All chains, boomers, clamps, and tensioning devices remaining in the working guy lines shall be bypassed by continuing the guy line through or around the anchor, then back to the guy line again. The guy line shall be properly secured with at least three (3) U-bolt clamps of proper size or their equivalent.

(i) Fairlead (sheaves) at least in strength to the anchor may be used in the eye of the

anchor.

(e) Guy line anchors, including expanding anchors, pipe anchors, concrete anchors, or other approved techniques shall be used, except that temporary, moveable or driven stakes shall not be used. Locations of all anchors shall be marked with an appropriate marker that extends a minimum of 24 inches above ground level. **Exception:** This rule does not apply when the manufacturer does not recommend the use of wind guys and the following conditions are met:

(i) no one is in the mast during operation;

(ii) no rod, tubing, etc. is racked in the mast;

(iii) outriggers are utilized; and

(iv) the mast height is 60 feet or less.

(f) Anchor placement and pull tests.

(i) ~~With respect to anchors installed, reinstalled or relocated on or before September 24, 1970, anchors shall be proof-tested along an angle that approximates the wind guys working plane within the anniversary or 12th month prior to the use of the anchors. EXAMPLE: An anchor pull tested in January 1992 shall be usable through the last day of January 1993, likewise an anchor tested on June 10, 1994 is good through June 30, 1995. Such tests will be at the poundage determined by the anchor's location (per Figure 5a) within Sector A, B, or C, and computed according to the appropriate sector curve on Figure 4a. If either of the two front anchors fall in a sector which requires a higher test pull, both front anchors shall be tested as if they were located in the sector requiring the higher pull test. If is frozen at the time of the test and anchors are to be used again when the ground is not frozen, the anchors must be retested before use. If any anchor is more than three (3) feet above or below the well ground level, Figure 6 shall be used to determine the adjusted distance for which the pull test requirement will be established using Figure 4a. Anchors to be used for singles derricks only shall be proof-tested to 10,000 lbs. and must be located within Sector A, B, or C of Figure 5a.~~

~~(ii) With respect to anchors installed, reinstalled or relocated on or after September 25, 1970~~, anchors shall be proof-tested along an angle that approximates the wind guy's working plane within the anniversary or 12th month prior to the use of the anchors. EXAMPLE: An anchor pull tested in January ~~1992~~ 2013 shall be usable through the last day of January ~~1993~~ 2014; likewise an anchor tested on June 10, ~~1994~~ 2013 is good through June 30, ~~1995~~ 2014. Such tests will be made at the poundage determined by the anchor's location - (per Figure 5~~b~~) within Sector A, B, or C, and computed according to the appropriate sector curve on Figure 4~~a~~. If any anchor falls in a sector which requires a higher test pull, all four (4) anchors shall be tested as if they were located in the sector requiring the higher pull test. If ground is frozen at the time of the test and anchors are to be used again when the ground is not frozen, the anchors must be retested before use. If any anchor is

more than three (3) feet above or below the well ground level, Figure 6 shall be used to determine the adjusted distance for which the pull test requirement will be established using Figure ~~4a~~. Anchors to be used for singles derricks only shall be proof-tested on 10,000 lbs. and must be located within Sector A, B, or C of Figure 5~~b~~.

(g) No oil or gas well servicing unit shall be rigged up on a work site unless wind guy anchors have been installed and tested in accordance with this section. Exception: This rule does not apply when the manufacturer does not recommend the use of wind guys and the following conditions are met: (1) no one is in the mast during operation, (2) no rod, tubing, etc. is racked in the mast, (3) outriggers are utilized, and (4) the mast height is 60 feet or less.

(h) Wind guy anchors and servicing unit placement.

(i) Wind guy anchors shall be positioned in accordance with Figure 5~~a or 5b~~.

(ii) The well operator shall provide a visible marker in such a position that a straight line through the marker and through the well head will form an angle with a line through any anchor and the well head which complies with the minimum angle requirements as follows:

*Minimum Angle
Distances From Well Centerline

Sector	Each Quadrant	Minimum Angle	Front and Rear	Sides
A	20°	35°	14	10
B	30°	30°	17	10
C	45°	22.5°	24	10

***** In the use of Figure 5~~b~~, if any anchor in the pattern falls within Sector "C", the minimum angle on all anchors is 22.5° . One or more anchors located in Sector "B", with the remaining anchors in Sector "A", requires the minimum angle to be 30° on all anchors~~. In the use of Figure 5a, the minimum angle of any anchor is 22.5°.~~ A field determination of the angle can be found by measuring these distances in convenient units such as feet, and/or paces in reference to the well centerline, the anchors and the longitudinal axis of the unit. (Example: With a single anchor in the pattern located in Sector "C", one could take 24 paces from the well head on an imaginary line which bisects the two adjacent anchors between which the servicing unit will be placed. At this point there would be placed a marker or a stake. One would then take 10 paces to the left and turn so as to be aligned with the well head. If anchors "A" and "C" (Diagram A) are "outside" the alignment, these anchors would be satisfactory. Going back to the center marker, one would repeat this procedure to the right. If anchors "B" and "D" are outside one's alignment, the center marker is satisfactory. If alignment to either the left or right was not satisfactory, the center marker or stake would be moved to the left or right as needed and the alignment rechecked until the center marker is located properly.)

(A) The visible marker shall be placed on a direct line from the well head

which passes through the center marker at least 100 feet from the well.

(iii) The servicing unit operator shall center his unit in line with the marker and the well head.

(iv) Where there is provided a readily visible and clearly defined pad for the positioning of the servicing unit which will maintain the required minimum angle from the longitudinal axis of the unit and the well to any anchor, the use of the marker in h. (2) is optional.

(i) Each well site shall have available at such well site in an accessible, weatherproof container, or in a field office within a five (5) mile radius of the well, an Anchor Record. Such Anchor Record shall state the date the anchor was installed, ~~prior to, or subsequent to September 24, 1970~~, or the date of any relocation or reinstallation of any anchor at the well site ~~after September 24, 1970~~, each anchor's pull test ~~(~~sector~~)~~ from Figure 5~~a or 5b~~, and the date, total amount of such pull test, and identification of the tester. This rule does not apply when the manufacturer does not recommend the use of wind guys and the following conditions are met: (1) no one is on the mast during operation, (2) no rod, tubing, etc. is racked in the mast, (3) outriggers are utilized, and (4) the mast height is 60 feet or less.

(i) Each anchor shall be pulled and held for a period of two (2) minutes after all movement (creep) has stopped.

(ii) The anchor record shall state "FOR SINGLES DERRICKS ONLY" if the anchors are only tested to 10,000 pounds.

(j) All anchor testing units shall be certified by the ~~Workers' Safety and Compensation Division~~ Wyoming OSHA Division.

(k) Wind guys from crown or tubing (racking) board shall not be any closer than ten (10) feet from power lines, and in no case shall a wind guy be extended above or below a power line.

(l) Installation, testing and maintenance of guy line anchors shall be the responsibility of the well operator. The well operator shall not permit erection of doubles derricks on anchors proof-tested for singles derricks.

(m) Employers shall not erect any doubles derricks on anchors proof-tested for singles derricks.

(n) Gin pole operations shall be performed in accordance with *1910.181, Wyoming Occupational Health and Safety 1910-General Rules and Regulations.*

(o) Guying of masts in accordance with manufacturer's recommendations when such guying patterns meet or exceed the requirements as set forth in Figure 5~~a and 5b~~ shall be permitted.

Diagram A

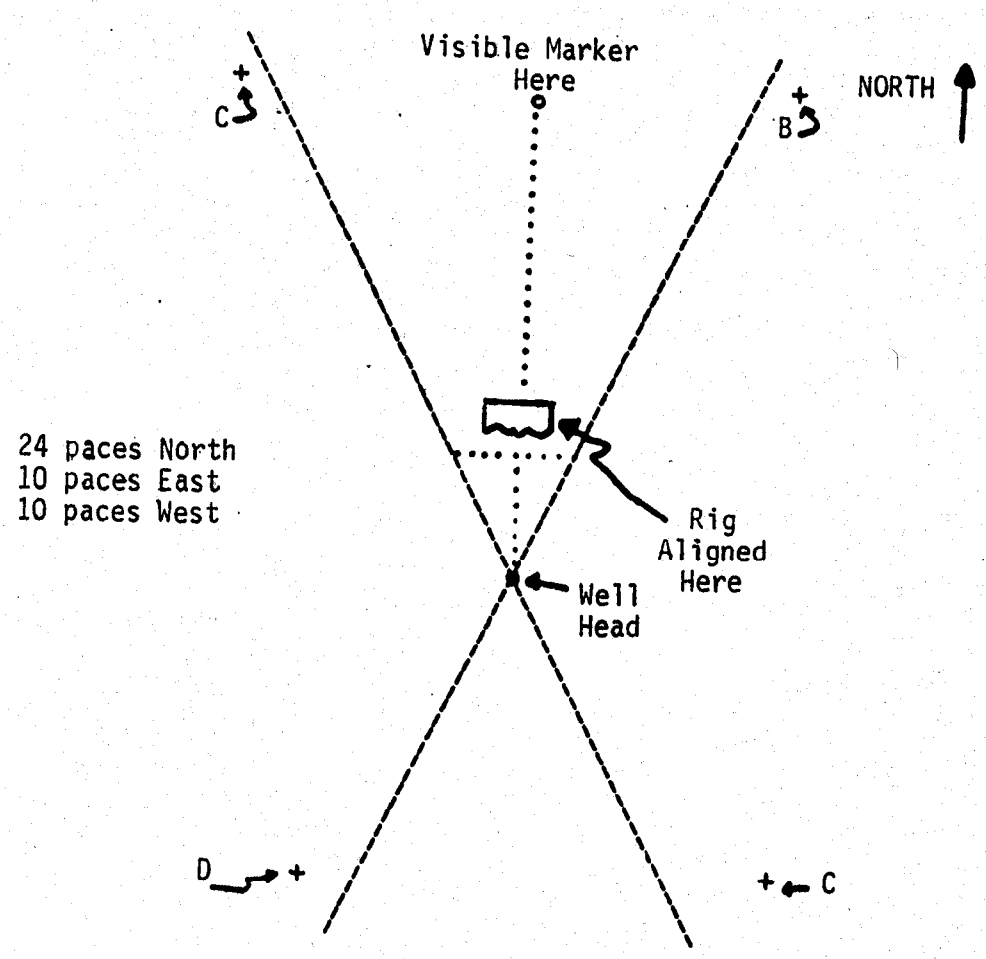

(Note: Directions shown are for this example only and do not require all units to be placed in a North/South position.)

Figure 4~~a~~

Pull Test requirements for anchors in areas "A" "B" and "C" from Figure~~s~~ 5~~a and 5b~~.

Pull Test shall be in one foot increments of radial distance from well head.

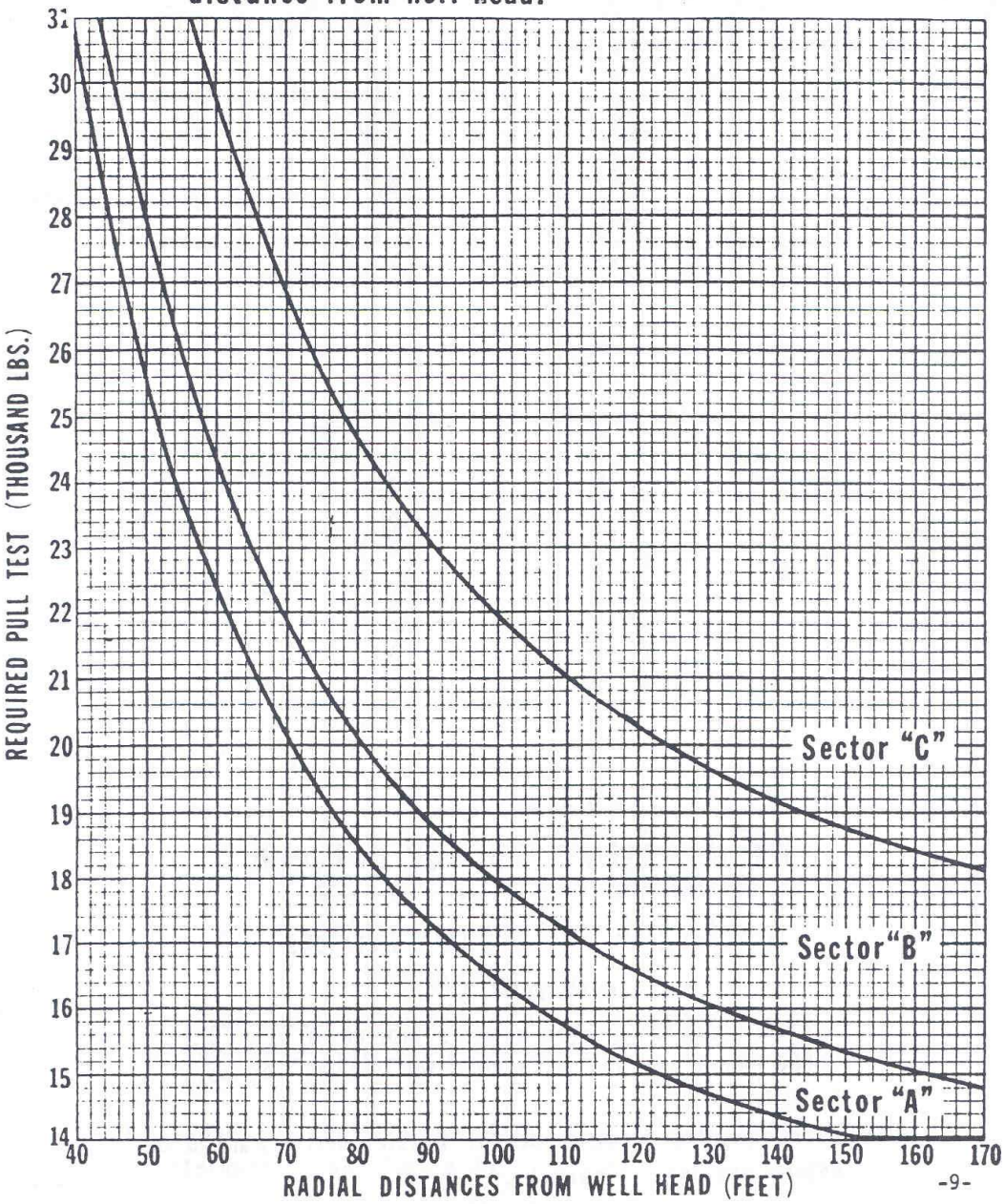

-9-

~~Figure 5a~~ Delete Figure 5a

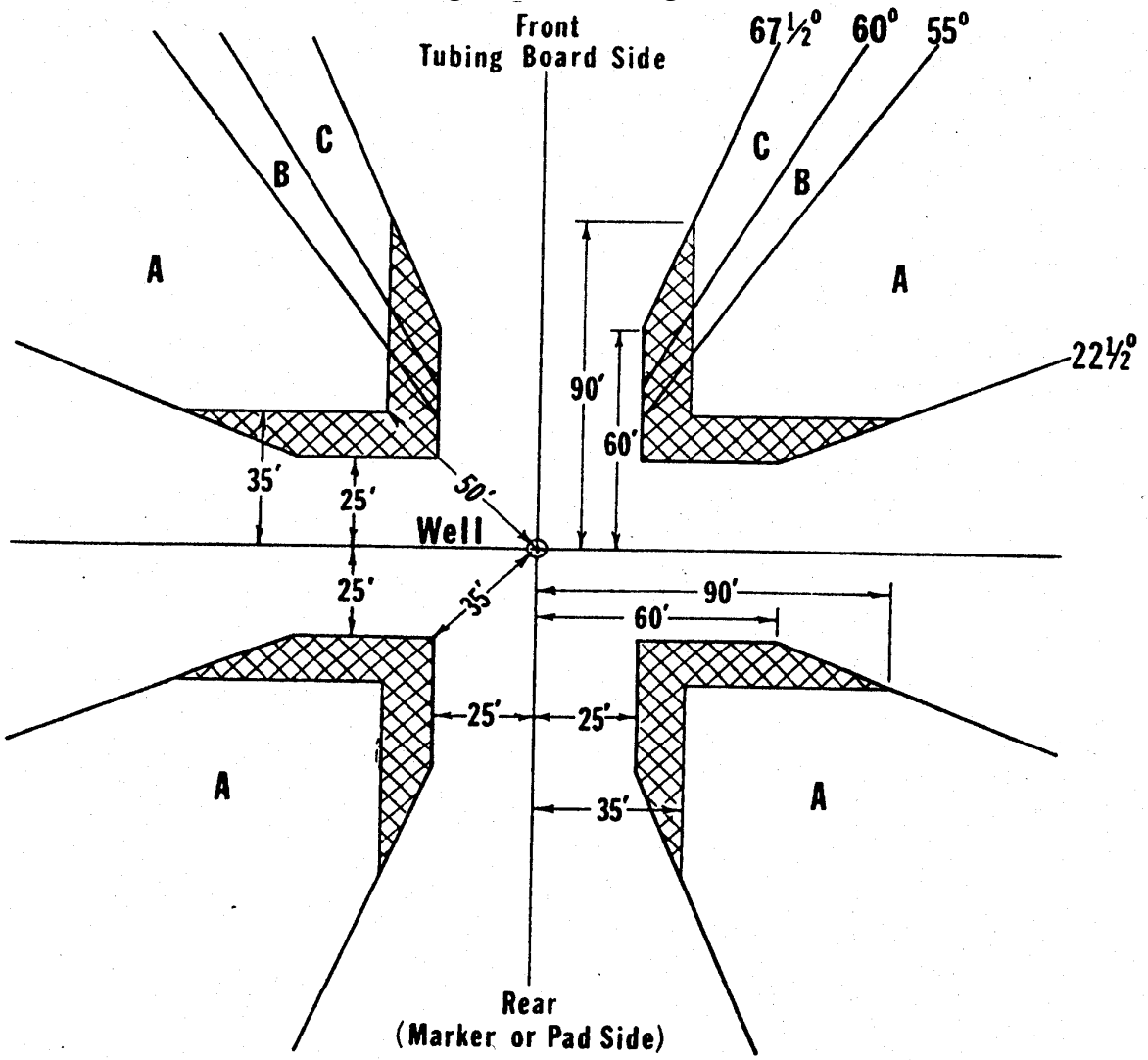

Wind Guyline Anchor Pattern

Anchors Installed Before 9-24-1970

For Singles and Doubles Derricks

Singles Only

Anchors must be located in areas labeled "A", "B" or "C". 10,000 pound pull test is required for "Singles" derricks in "A", "B" or "C."

NOTE: Anchor pull test requirements for "Doubles" derricks are to be determined from Figure 4a.

Figure 5~~b~~

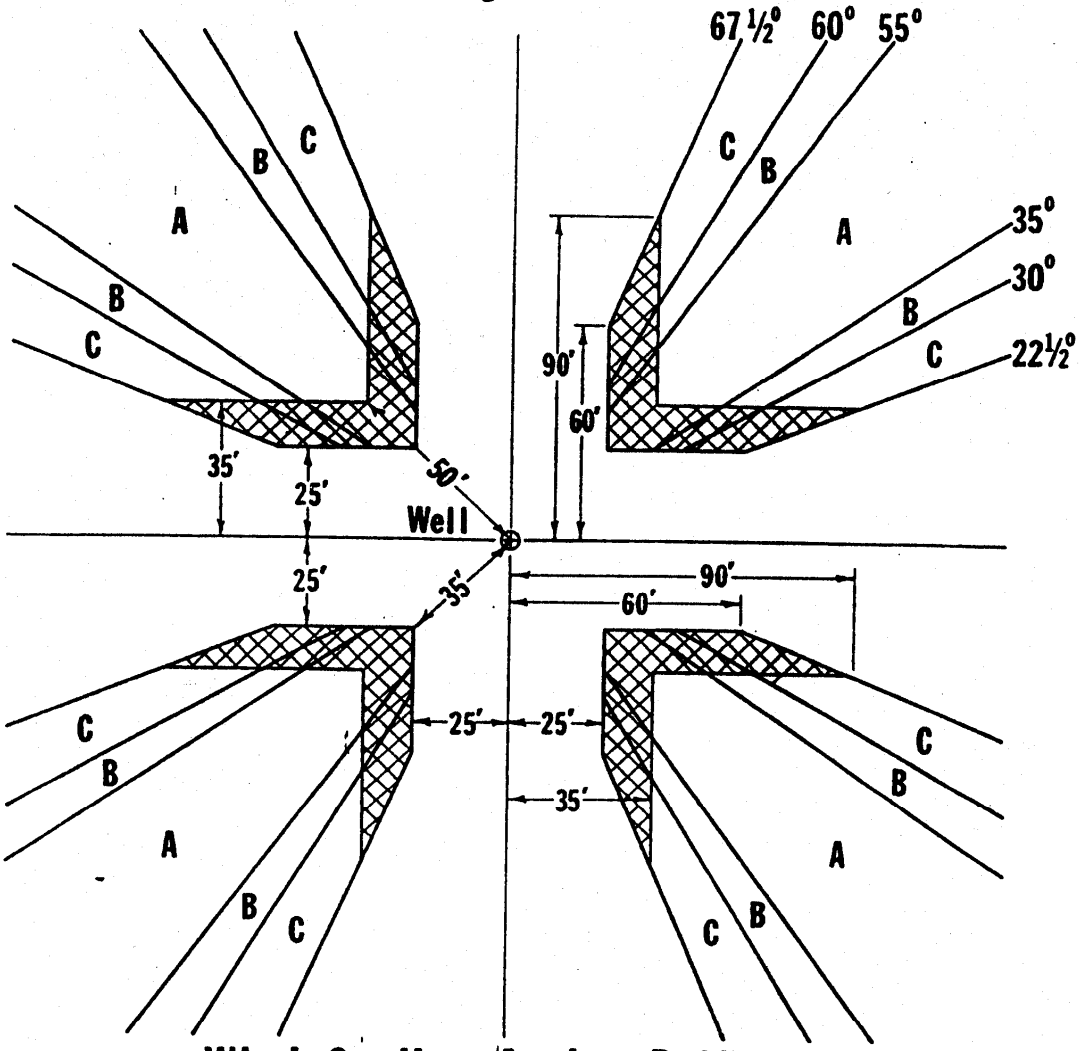

Wind Guyline Anchor Pattern

~~Anchors Installed After 9-24-1970~~

For Singles and Doubles Derricks

Singles Only ⊠

- Anchors must be located in areas labeled "A", "B" or "C". 10,000 pound pull test is required for "Singles" derricks in "A", "B" or "C."

NOTE: Anchor pull test requirements for "Doubles" derricks are to be determined from Figure 4~~a~~.

Figure 6

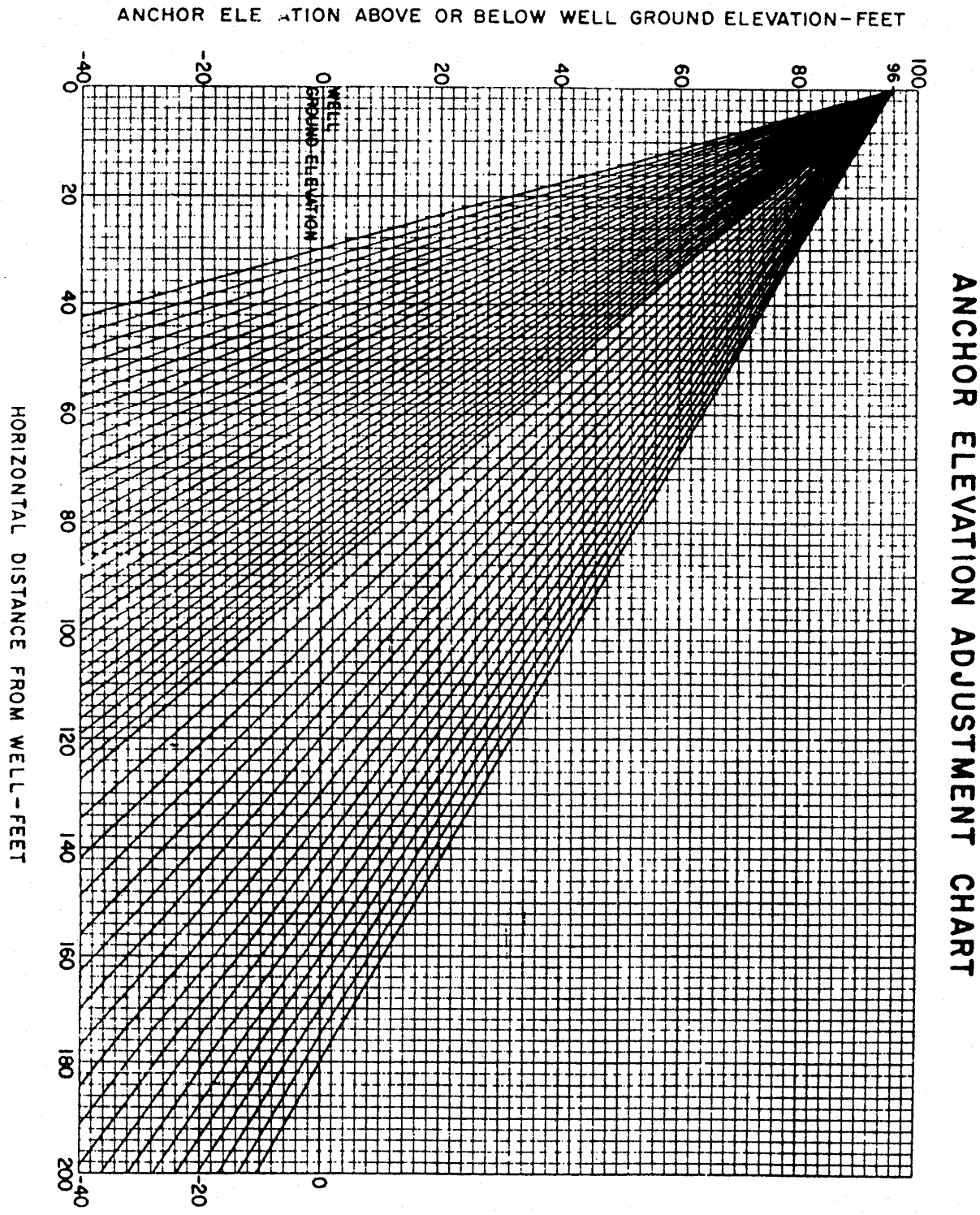

~~See Page 20C~~

ANCHOR ELEVATION ADJUSTMENT CHART

Directions for use of Figure 6:

After determining the elevation difference between the well ground level and the anchor ground level, find that difference on the Figure designated "Anchor Elevation Above or Below Well Ground Level". Follow that difference line until it meets the vertical line which represents the actual distance from well head to the anchor. Then follow the slanted line, either up or down as applicable, until "0" (Well Ground Level) is reached. Read vertically, and read the "Horizontal Distance from Well - Feet". This adjusted distance is then applied to Figure 4 to determine the required pull test according to the Sector in which the anchor is located. (Example: An anchor located 10 feet above well ground level 100 feet from the well head would, using Figure 6, require the same pull test as though it was 110 feet from the well. An anchor 15 feet below well ground level 80 feet from the well head would require the same pull test as though it was 70 feet from the well head.)

Section 5. Riding Hoisting Equipment

(a) No employee shall ride traveling blocks when rods or tubing or any other downhole equipment is being moved.

(b) No employee shall ride the traveling blocks except in an emergency. Anyone riding the traveling blocks shall wear an approved personal fall arrest system that is adjusted so as to allow the minimum fall distance possible.

(c) The catline shall not be used as a personnel carrier except in an emergency.

(d) Tugger lines shall not be used to hoist personnel unless the manufacturer specifically allows the hoisting of personnel and specifies the use of a bosun's chair (boat-swan) and full body harness, or equivalent, that is attached to the tugger line.

(i) if there is no manufacturer's guidance on hoisting personnel, the tugger line with proper rating capacity may be used to reach an otherwise inaccessible location, if a bosun's chair (boat-swan) with full body harness is used, and the tugger line meets the following requirements:

(A) Self centering, that when released returns to the center position and has locking/braking capability.

(B) Control lever shall be attended at all times while lifting, stabilizing, or lowering of personnel.

(C) Lifting cable will be a minimum of 3/8-inch diameter, and all hoisting equipment shall have a minimum workload of 4,000 pounds.

(D) All connections shall meet ANSI standards.

Section 6. Auxiliary Escape.

(a) All derricks shall be equipped with a specially rigged escape line, of ~~at least one-half inch (1/2") diameter wire line or other escape devices acceptable to the Department~~ suitable diameter and type. It shall be in good condition, without kinks, free of obstructions, broken wires or a coating of grease. ~~Line shall be secured by three (3) clamps at the derrick and at least one (1) clamp at the anchor~~.

(i) The landing area must be clear of obstructions and hazards to permit safe landing of the user.

(b) ~~The derrick escape line shall be equipped with an approved- type personnel carrier with a~~

~~brake, both in good working order, to control the rate of descent. The angle of the anchored escape line shall not be less than 45° to the vertical plane.~~ An approved emergency descent device shall be installed on the escape line and kept at the derrickman's working platform. The employer has until July 1, 2014 to replace approved-typed carrier with brake, to an approved emergency descent device.

(i) The emergency descent device shall be installed per manufacturer's specifications.

(ii) The emergency descent device shall be installed and used by personnel trained in its correct application and use.

(iii) The emergency descent device and escape line shall be inspected by the derrickman prior to each trip.

(c) The derrick escape line, or other device, shall be anchored to the derrick so that the personnel carrier shall be available at a readily accessible point at either the rod board or the tubing board.

Section 7. ~~[Reserved]~~ Personnel Fall Arrest System

(a) Every person, when engaged in work at four (4) feet or more above the derrick floor or other working surfaces, shall wear a full body harness with an attached safety line secured to a suitable anchor except where infeasible during rig up and rig down.

(i) Employer shall provide for prompt rescue of employees in the event of a fall.

(ii) A written rescue plan shall be developed and kept on the rig.

(iii) The employees shall be effectively trained on these rescue procedures.

(b) Where these regulations prescribe the use of full body harnesses:

(i) The employee shall use an approved full body harness suitable for the particular job, be in good condition, and shall be provided by the employer;

(ii) The full body harness shall be attached by means of a personal fall arrest system to a suitable anchor and adjusted to allow a minimum of drop;

(iii) A separate life line shall be provided for each employee requiring a life line; and

(iv) Full body harnesses and life lines shall be checked before each use, be maintained in good condition, and shall be repaired or replaced if found to be defective.

Section 8. Floors and Ladders.

(a) Each service unit shall be equipped with a working platform to be used around the wellhead when personnel perform their duties from ground level. The platform is to be of sufficient size that two (2) men may work on it and the pipe racker can rack pipe without leaving it.

(b) When this platform is raised to ~~six feet (6')~~ four feet (4) or greater, it shall be equipped with guardrails around its outer edges at a nominal height of 42" inches. It shall also have midrails and a four inch (4") toeboard around the outer edge of the working platform. Where railings are not feasible, chains or cable of suitable strength may be used. Stairs with four or more risers shall be equipped with hand rails on both sides.

(c) Any temporary stabbing board or other temporary boards placed in the derrick shall be securely fastened.

(d) All ladders shall be constructed of structural grade steel or equivalent.

(e) Ladder rungs shall be a minimum of three-quarters inch (3/4") diameter uniformly spaced and not to exceed 12 inches measured from top of rung to top of next rung and have a minimum width 16 inches.

(f) No ladder shall lean backwards from the vertical, nor to the side over 10° from vertical.

(g) Each permanent ladder section shall be secured to derrick by welding or bolting.

(h) Clearance in back of ladder. The distance from the centerline of rungs, cleats, or steps to the nearest permanent object in back of the ladder shall be not less than seven inches (7"). When unavoidable obstructions are encountered, minimum clearances for the two rungs on either side of the obstruction shall be measured vertically from the obstruction no less than one and a half inches (1-1/2") to the upper rung and four and a half inches (4-1/2") to the lower rung.

(i) Cage and landing platforms, when used, shall comply with the requirements stated in *1910.27 of the Wyoming Occupational Health and Safety 1910-General Rules and Regulations.* Approved ladder climbing devices may be in lieu of cage and landing platforms. Cage and landing platforms, or approved ladder climbing devices, shall be required on all ladders over 20 feet in height.

(j) A guardrail used and/or needed for the purpose of actual or potential containment of equipment or material shall be of such construction and strength as to effectively contain the full load or stress which may be anticipated to be applied upon it. (For example, if 25 pieces of six inch (6") pipe are contained by a guardrail, or any attachment to the guardrail, such guardrail and attachment must be capable of safely holding that quantity of pipe, plus an additional allowance for at least two (2) employees, assuming 200 pounds per employee.)

(k) All mast ladders on all servicing rigs are exempted from the requirements of subsections (e) and (h) of this section, provided the employer makes available and requires the use of an approved personal fall arrest system.

Section 9. Pipe Racks

(a) Pipe racks shall be so designed to support any load to be placed thereon.

(i) Pipe racks shall be set level laterally on a stable foundation. They may slope front to back to facilitate laying down or picking up pipe.

(ii) Provisions shall be made to prevent pipe, tubular material or other round material from rolling off pipe racks.

(b) No employee shall be permitted between the pipe racks and a load of pipe during loading, unloading and in transferring operations.

(i) Pipe shall be loaded and unloaded layer by layer, with bottom layer pinned or blocked securely on all four corners.

(ii) When pipe is being moved or transferred between pipe racks and truck trailer, the temporary supports for skidding or rolling shall be so constructed, placed and anchored as to support the load that is placed on them.

(c) During weather of potential freezing, pipe standing on end which contains water-based fluid with an API funnel viscosity greater than 75 seconds shall be positioned so as to afford proper drainage.

Section 10. Clothes Change Rooms.

(a) Change rooms shall be kept reasonably clean and sanitary at all times.

(b) Trash, waste paper, dirty rags, clothing saturated with oil, etc., shall not be allowed to accumulate in change rooms.

(c) Change rooms with stoves in operation shall not be less than 120 feet from the well or well bore when hydrocarbons or other volatile substances are in the well.

Section 11. Safety Procedures for Welding, Cutting and Brazing.

(a) <u>Welding, cutting, brazing or the use of an open flame or a non-explosion proof heater within 120 feet of the well bore shall require a written hot work permit. The hot work permit must adequately address the requirements listed in (i), (ii), and (iii) below and be maintained at the job site while applicable work is in process.</u>

(i) Pre-Work Stage Communication Meeting

(1) Simultaneous operations.
(2) Air/gas testing with LEL monitor
(3) Equipment isolation
(4) Equipment preparation
(5) Identification of hazards
(6) Emergency procedures

(ii) Work-In-Progress Stage:

(1) Air/gas testing with LEL monitor
(2) Personal protective equipment requirements
(3) Fire watch
(4) Special procedures/precautions

(iii) Return to Service Stage:

(1) Authorization and turnover signatures
(2) Posting of permit

(iv) Welding, cutting and brazing more than 120 feet from the well bore shall ~~not be done in the presence of explosive gas or fumes, or near combustible materials, except when~~ be performed in compliance with *1910.252 (d) of the Wyoming Occupational Health and Safety 1910-General Rules and Regulations.*

(b) Proper protective hoods and glasses shall be worn by the welder.

(c) Fire extinguishers shall be provided for welding operations as required by Chapter 4, Section 6.(i). of these rules and regulations.

(d) Compressed gas cylinders shall be stored in a well protected, well ventilated location, at least 20 feet from combustible materials. Cylinders should be stored in definitely assigned places away from elevators, stairs or gangways. Assigned storage spaces shall be located where cylinders will not be knocked over or damaged by passing or falling objects, or subject to tampering by unauthorized persons. Cylinders shall not be kept in unventilated enclosures, such as lockers and cupboards.

(i) Cylinders shall be secured in an upright position;

(ii) Cylinders should be separated in storage as to full and empty cylinders and shall be separated as contents, either by a distance of 20 feet or by a non-combustible barrier at least five feet (5') high having a fire-resistance rating of at least one-half hour;

(iii) Cylinders shall be handled carefully to prevent dropping;

(iv) Cylinders shall be transported with gauges removed and caps in place, except cylinders in use on welding trucks or carts in the work area.

(e) Oxygen cylinders, and all attachments thereto, shall be kept free of all grease and oil and other hydrocarbons.

CHAPTER 6

EQUIPMENT

Section 1. Derricks

(a) Each derrick or mast shall show name of manufacturer, safe load capacity, wind load capacity of miles per hour and capacity rating of derrick or mast.

(b) No derrick or mast shall be subject to a compression load greater than the safe load limit shown on the manufacturer's plate.

(c) Derricks, mast guying and foundations shall comply with the standards for guy lines, anchors and foundation bases for well servicing units.

(d) Derricks and masts shall be equipped with guards which shall prevent the hoisting lines from being displaced from the sheaves during operations or when being raised or lowered from the operating position.

(e) A visual inspection of the service unit shall be made by a qualified person before the derrick or mast is raised or lowered.

(f) A qualified person shall be in charge of raising or lowering a derrick.

(g) Before any derrick is raised or lowered, all tools and material not secured to the derrick shall be removed from the derrick.

(h) The derrick shall be level and plumb before guys are tightened.

(i) Before any load is put on the derrick, all crown guys shall be tightened properly.

(j) No employee shall be allowed in the derrick when it is being raised or lowered.

(k) Each derrick platform shall be constructed, maintained and secured to the derrick to withstand the weight of employees or other stresses which may normally be placed upon it.

(l) Finger boards shall be attached to the derrick to keep them from falling if jarred loose or broken.

(m) Unattached tools or material of any kind shall not be kept in the derrick above the derrick floor unless there is occasion for their immediate use.

(n) There shall be no openings large enough to permit an employee to fall between the beams or main supports or framework of the crown.

(o) No employee shall be in the derrick when the initial pull is made on the rods or tubing or when working or jarring stuck rods or tubing.

(p) All masts shall be equipped with locking devices with sufficient strength to prevent the mast from bending at the hinge point. The locking device shall be approved by the rig manufacturers. The mast will be locked as soon as the mast is in position and remain locked until the mast is to be lowered.

(q) Tubing or rod shall be secured to the appropriate board prior to the employee leaving the board in high winds.

Section 2. Hoisting Lines, Wire Ropes, Fiber Ropes and Chains.

(a) A dead-line anchor for a hoisting line (wire rope) shall be so constructed, installed and maintained that its strength shall at least equal the working strength of the hoisting line.

(b) Every hoisting line (wire rope) used in servicing operations shall have a minimum safety factor of three (3), determined as follows:

$$\text{Safety Factor} = \frac{\text{B (Nominal breaking point of the wire rope in pounds)}}{\text{W (Calculated total static load in pounds)}}$$

(i) A minimum safety factor of two (2) shall be permitted only in the following operations:

(A) On rotary drilling line when setting casing; or

(B) When pulling on stuck pipe and similar infrequent operations.

(c) All hoisting lines (wire rope) shall be visually inspected by a competent person of the servicing rig daily and shall be thoroughly inspected at least each thirty (30) days with a record made of the monthly inspection, designating any noted defects. The last six (6) months of monthly inspections records shall be kept on the servicing rig. Any wire rope shall be removed from service when any of the following conditions exist:

(i) When wire lines are found to have four (4) percent of the total number of wires composing such wire broken in one lay;

(ii) When marked corrosion appears;

(iii) When corroded or broken wires at end connections are noted;

(iv) When end connections are corroded cracked, bent, worn or improperly applied; or

(v) When evidence of kinking, crushing, cutting or unstranding are noted.

(d) The wire rope (wire line) manufacturer's recommendations shall be utilized.

(e) On any drum on which a hoisting line (wire rope) is wound, the end of the hoisting line (wire rope) shall be fastened securely to the drum.

(i) When the wire rope is in the fully extended position there shall be at least three wraps on the drum to provide sufficient snubbing action.

(f) The hoisting line (wire rope) shall not be removed from the drum until:

(i) The traveling blocks are laid down; or

(ii) The traveling blocks are held suspended by a separate wire rope or chain of equivalent strength.

(g) The hoisting line (wire rope) shall not be in direct contact with any derrick member, any stationary equipment or material in the derrick, except the crown block and any traveling block sheaves, a line spooler, a line stabilizer, weight indicator or dead line anchor.

(h) Every overhead sheave or pulley which a line spooler counterweight rope runs shall be fastened securely to its support.

(i) Chains.

(i) The practice of placing bolts or nails between two links to shorten chains is prohibited.

(ii) Splicing or repairing broken chains shall be accomplished by use of repair devices approved by the manufacturer. The use of welding, brazing, bolts, wire, nails and other such methods or devices is prohibited.

(j) Winches and cables.

(i) Cable shall be in good repair. When respooling, care shall be used to avoid kinking. Cable clamps and thimbles, properly installed, shall be used.

(ii) Personnel shall not stand near, step over or go under a cable while it is under

tension.

(k) Chain used in connection with servicing or production operations shall be suitable for the type of service.

(l) Any chain shall be discarded or repaired if it has been stretched to the point where links bind, kink, lock or it has been broken.

(m) Fiber ropes cut, frayed (through one or more lays) or that have been in contact with caustic acid, or any other chemical that might weaken them, shall be replaced immediately.

(n) Cable clamps shall be installed according to the chart in the Rigger's Handbook.

APPLYING WIRE ROPE CLIPS

The only correct method of attaching U-bolt wire rope clips to rope ends is shown in the illustration. The base of the clip bears against the live end of the rope, while the "U" of the bolt presses against the dead end.

The clips are usually spaced about six rope diameters apart to give adequate holding power.

Before ropes are placed under tension the nuts on the clips should be tightened. It is advisable to tighten them again after the load is on the rope to take care of any reduction in the rope's diameter caused by the weight or tension of the load.

A wire rope thimble should be used in the loop eye to prevent kinking when wire rope clips are used.

The correct number of clips for safe application, and spacing distances, are shown in the table below.

Number of Clips and Spacing for Safe Application

Rope Diam. in.	Approx. Weight lb	Minimum No. Clips for Each Rope End	Spacing* of Clips in
3/16	0.10	2	1⅛
1/4	19	2	1⅞
5/16	.29	2	1⅞
3/8	47	2	2¼
7/16	70	2	2⅝
1/2	78	3	3
5/8	1 06	3	3¾
3/4	1 59	4	4½
7/8	2.40	4	5¼
1	2 72	4	6
1⅛	3 20	5	6¾
1¼	4 50	5	7½
1⅜	4 60	6	8¼
1½	5 80	6	9
1⅝	7 20	6	9¾
1¾	9 50	7	10½
2	12 50	8	12
2¼	15 50	8	13½
2½	18 00	8	15

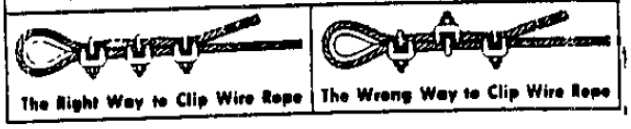

The Right Way to Clip Wire Rope | The Wrong Way to Clip Wire Rope

EXAMPLE A

TWIN-BASE CLIP
DROP FORGED

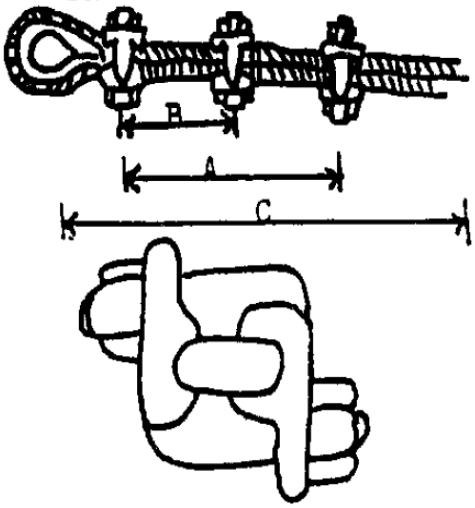

Laughlin Type

EXAMPLE B

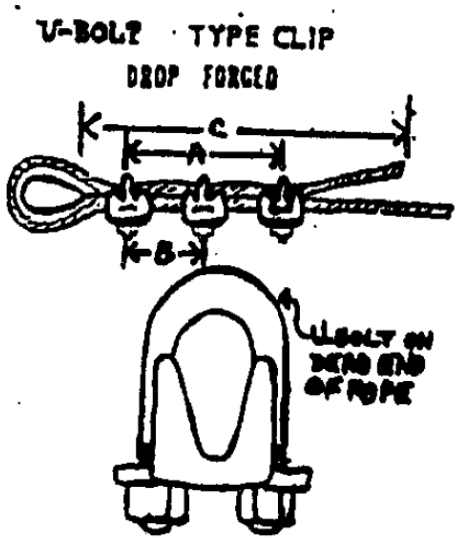

EXAMPLE C

EFFICIENCY OF WIRE ROPE CONNECTIONS
As Compared to Safe Loads on Wire Rope

Figure	Type of Connection	Efficiency
	Wire Rope	100%
1	Sockets – Zinc Type – properly attached	100%
2	Wedge Sockets	70%
3	Clips – Crosby Type	80%
4	Knot and Clip (Contractors Knot)	50%
5	Plate Clamp – Three Bolt Type	80%
6	Smooth Clamp	80%
7	Spliced Eye and Thimble:	
	¼" and smaller	100%
	⅜" to ⅝"	95%
	⅞" to 1"	88%
	1⅛" to 1½"	82%
	1⅝" to 2"	75%
	2⅛" and larger	70%

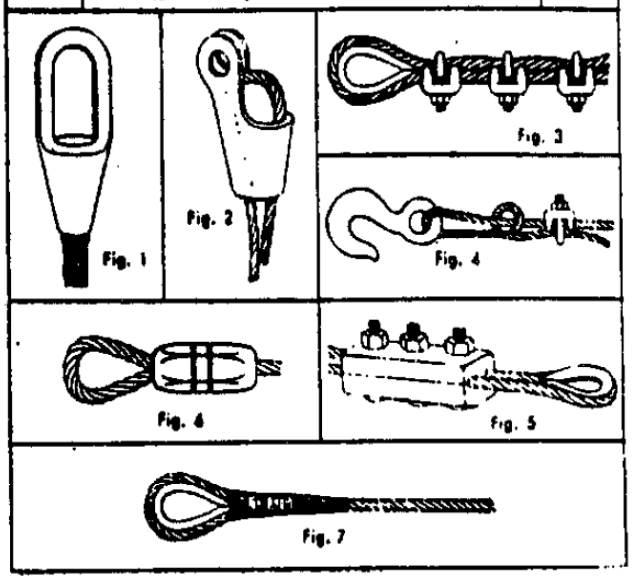

Section 3. Hoisting Block.

(a) All traveling blocks shall be properly guarded.

(b) Any slip hook used for lifting shall be equipped with a safety latch or safety cable and pinned.

(c) All traveling blocks, elevators, elevator links or similar equipment shall be reasonably free of projecting bolts, nuts, pins or other parts upon which clothing of workers may be caught.

(d) All traveling blocks and similar equipment shall be maintained in good working condition and never exceed manufacturer's listed rating.

Section 4. Weight Indicators.

(a) Every well servicing rig shall be equipped with a reliable weight indicator.

(b) A weight indicator shall be used to indicate the suspended load.

(c) Weight indicators shall be safely secured and shall be easily visible to the equipment operator.

(d) Manufacturer's rated load capacity of the servicing unit shall not be exceeded.

Section 5. Drawworks.

(a) A visual inspection of the drawworks and its working parts shall be made each day or tour before operations begin.

(b) All guards and covers shall comply with *Chapter 5, Section 2*. of these rules and regulations.

(c) If lubrication fittings are not outside of guards, machinery shall be completely stopped for oiling and greasing.

(d) When it becomes necessary to remove a guard, the drawworks shall be completely stopped.

(e) All air compressors shall have at least one (1) pressure control for proper air flow.

(f) The safety pressure relief valve on main air tank shall be checked periodically and kept in proper working order.

(g) All valves or other working devices on hydrostatic lines shall never be set higher than the design rating of the hydraulic system or the manufacturer's listed rating of the lines, whichever is less.

(h) Safety pressure relief valves on hydrostatic lines shall never be set higher than the design rating of the hydraulic system or the manufacturer's listed rating of the lines, whichever is less.

(i) The brakes, linkage and brake flanges on the drawworks shall be tested and visually inspected each day.

(j) The equipment operator shall not leave the brake without tying the brake down or securing it with a catch lock.

(k) The equipment operator shall not leave the brake while hoisting drum is in motion.

(l) Catheads on which a rope is manually operated shall have a rope guide to hold the on-running rope in alignment with its normal running position against the inner flange.

(m) When a rope or line is in use on a cathead, all other ropes or lines shall be placed so as not to come in contact with the cathead or with the rope or lines on the cathead.

(n) When the cathead is unattended, no rope or line shall be left wrapped on or in contact with the cathead.

(o) When the cathead is in use, there shall be an authorized employee at the drawworks control and/or safety shutdown switch by the cathead to stop rotation in case of emergency.

(p) Catheads must be checked for grooves and rebuilt and turned or replaced when necessary to prevent fouling.

Section 6. Electrical and Internal Combustion Engines.

(a) All electrical equipment, wiring, fixtures and cords shall be installed and used in accordance with *Subpart S, Wyoming Occupational Health and Safety 1910-General Rules and Regulations*.

(b) Portable engine-driven light plants shall be located a minimum of 120 feet the well bore when hydrocarbons or other volatile substances are present unless the light is intrinsically safe and a spark arrestor or equivalent equipment installed on engine exhaust.

(c) Spark arrestors or equivalent equipment shall be provided on all internal combustion engines exhausts located within 120 feet of the well or well bore.

(d) Emergency shut-down device (s) that will close off the combustion air shall be properly installed and identified on all diesel engines that are an integral part of the servicing rig or are operated as a stationary or mobile engine of a servicing rig within 120 feet of the well or well bore.

Section 7. Mud Pits and Tanks.

(a) [Reserved]

(b) Tanks for flammable materials shall be set so that if the tanks leak or rupture, the flammable materials will drain or be contained away from the well and equipment by the use of ditches or dikes or their equivalent.

(c) All fixed mud guns used for jetting shall be pinned or hobbled when unattended.

(d) Hoses used for jetting operations shall be manned, and there shall be an employee stationed at the pump controls to shut down the pressure in the event of emergency.

(e) When necessary to enter a tank which contained toxic fluid, the rules and regulations as specified in *Chapter 4, Section 5,* shall apply.

(f) All discharge lines shall be safely secured.

(g) Portable tanks shall be located where it is not possible for personnel or equipment to come into contact with overhead power lines.

(h) All portable tanks in excess of five (5) feet in height, used in testing and treating, shall be equipped with fixed metal ladder with:

(i) Rungs of three-quarter (3/4) inch in diameter or its equivalent;

(ii) Sixteen inches horizontal rung clearance;

(iii) Twelve inches vertical clearance between top of one rung and top of next rung; and

(iv) Seven inches clearance between rungs and tank.

(i) All tanks over five (5) feet in height, used in testing and treating, shall be equipped with fixed permanent risers when it is necessary to circulate or flow fluids into top of tank. No employee shall jump from one tank top to another.

Section 8. Pumping Units.

(a) The operator shall assure that after the pumping unit is turned off, the master control shall be locked in the "off" position, the brake set, and the means to secure the weights in a safe manner to prevent any movement of weights and/or beam is employed before servicing operations begin.

(b) Braking systems on all pumping units shall be maintained and kept in proper working order.

(c) A wire rope sling of sufficient strength shall be used to handle the horse’s head if removal or installation is necessary. The head shall be secured after installation in accordance with manufacturer's specifications.

CHAPTER 7

SPECIAL OPERATIONS

Section 1. Applicability.

All applicable requirements of these rules and regulations, in addition to those found within this Chapter, shall apply to special operations.

Section 2. Swabbing or Other Wire Line Operations.

(a) There shall be no person or employee the derrick or within 10 feet of the wellhead during the time the swab line or other wire line is being run in the hole.

(b) All oil savers shall be of the types that do not require an employee or person to be near the lubricator on wellhead to control the oil saver.

(c) All swab lines, blow down lines flow lines to pits or tanks shall be securely anchored. Whenever hydrocarbons or other volatile fluids may be expected these lines shall extend a minimum distance of 75 feet from the well.

(d) On wells where there is a possibility of flow, there shall be a lubricator in use that will allow the removal of the swab or other tools without turning the well loose to the atmosphere.

(e) There shall be no radio or radio-phone transmitters operated where there is a perforating in progress.

(f) Swabbing operations shall be restricted to daylight hours; (one-half (2) hour before sunrise to one-half (2) hour after sunset.)

Section 3. Flare Pits and Flare Lines.

(a) When lighting a flare pit, the lighting shall be done from the upwind side. When there is no wind or the wind direction is uncertain, no attempt shall be made to light the pit unless the operator can position himself in an explosive-free area. The use of hand thrown rags or similar flaming objects is prohibited.

(b) There shall be a minimum of l20 feet from the well bore to the end of the flare line.

Section 4. Cementing.

(a) Specific requirements.

(i)A pressure test on pump discharge lines when squeeze cementing shall be made at 1,000 psi over the maximum pressure specified by customer for his well equipment.

(ii) All valves in discharge lines shall be checked to see that they are open before giving orders to pump.

(iii) During operations each employee designated to handle the pumping shall remain constantly at his designated position while the pump is in operation, unless relieved by an authorized employee as directed by the supervisor on that job.

(iv) Unauthorized persons shall remain at least 75 feet from all pumping operations and pressure testing operations.

(v) Cementing pressure shall not exceed the equipment's maximum safe working pressure.

Section 5. Acidizing, Fracturing and Hot Oil Operations.

(a) Specific requirements.

(i) A check valve shall be placed in the discharge line as near the well bore as possible.

(ii) All blending equipment used in fracturing operations with flammable and/or combustible fluids shall be grounded to a conductive rod driven into the ground and all sand hauling equipment unloading sand into blender hopper shall be "electrically bonded" to the blender.

(iii) All supercharged suction hoses shall be covered with hose covers to deflect fluids when pumping flammable and/or combustible fluids.

(iv) A pretreatment pressure test on pump discharge lines shall be made at 1,000 psi over the maximum expected treating pressure specified by the customer for his well equipment.

(v) All valves in discharge lines shall be checked to see that they open before orders are given to pump.

(vi) During operations each employee designated to handle the pumping shall remain constantly at his designated position while the pump is in operation, unless relieved by an authorized employee as directed by the services supervisor on that job.

(vii) All acidizing, fracturing, and hot oil trucks and tanks shall be at least 75 feet from the well bore.

(A) All special servicing equipment that could produce a source of ignition shall

not be permitted within 75 feet of any tank containing a flammable and/or combustible material.

(B) When treating condensate with a hot oiler, if the hazard is greater because of starved suction, the equipment be placed closer than 75 feet.

(viii) Unauthorized persons shall remain at least 75 feet from all pumping operations and pressure testing operations.

(ix) All flammable and/or combustible fluid spilled on location shall be covered with dirt before pumping operations start.

(x) The fire truck, when on location, shall be spotted upwind of the operation when possible.

(xi) Treating pressure shall not exceed equipment maximum safe working pressure.

(xii) If pumping a flammable and/or combustible fluid, all electrical or internal combustion equipment, and all fires, within 75 feet of the well bore, not used for performance of the job, shall be shut down or off during treatment.

(xiii) Flammable and/or combustible fluids shall not be bled back into open measuring tanks on equipment designed for pumping.

(xiv) All spilled oil or acid shall he covered or properly disposed of after breakout with adequate precautions taken for personnel to prevent contact with such material.

(xv) All pumping operations involving hydrocarbons or volatile fluids shall be completed within daylight hours.

(xvi) The well operator or his designated representative shall conduct a safety meeting with all involved personnel prior to testing or treating operations.

(xvii) No person involved in hot oil operations shall be permitted to wear nylon or polyester clothing.

Section 6. Safety Procedures for Fuel Tanks.

(a) Specific requirements.

(i) Except for the fuel in the tanks of the operating equipment, Class III liquids, and those with flashpoints higher than Class III liquids, no gasoline or other liquid fuel shall be stored within 75 feet of a well bore.

(ii) Propane or butane tanks shall be placed parallel to any side of the of the rig.

(iii) Tanks shall be properly marked to indicate their contents.

(iv) Piping and/or tubing for fuel tanks shall be protected against damage from vehicles by elevation, burying or other effective means.

CHAPTER 8

SAFETY PROCEDURES FOR BOILERS, AIR COMPRESSORS AND PRESSURE VESSELS

Section 1. Boilers.

(a) Portable boiler used for rig heating shall be constructed, installed, operated, inspected and repaired to conform to the *Engineering Standards of ASME Boiler and Pressure Vessel Code, Sections I and VIII- 1971*.

(b) All boilers, while in operation, shall be under the supervision of a competent crew member.

(c) If any defects are found in a boiler or appurtenant equipment, the equipment operator in charge shall be notified immediately by the boiler operator and immediate corrective action taken.

(d) The safety pressure relief valve and discharge end of exhaust pipes leading from boilers shall be located or placed in such a way as to prevent discharge from being released to the atmosphere where injury to any person or property may result.

(e) Steam boilers shall be located at least 120 feet from the well bore when hydrocarbons or other volatile substances are in the well. (They should be located on the prevailing upwind side of the rig.)

(f) Each boiler shall be equipped with safety pressure relief valves set at a pressure not to exceed the working pressure of the boiler.

(g) Fuel valves shall not be located in front of the fuel burner, thus reducing potential of a burn in case of a flash-back.

(h) Ample lighting shall be provided so that water levels can be easily read.

(i) Boiler flues shall be kept reasonably clean at all times.

(j) Reclaimed water used in a boiler shall not be contaminated with crude or other oils.

(k) There shall be no valve at the discharge opening of a safety pressure relief valve, nor in the discharge pipe connected thereto.

(l) The safety pressure relief valve shall be connected as close to the boiler steam area as

possible, with no valves and minimum piping between the safety pressure relief valve and the boiler.

(m) The piping on the discharge side of the safety pressure relief valve shall be properly secured and shall contain no valves.

Section 2. Safety Procedures for Air Compressors.

(a) Air compressors used or operated shall be constructed, installed, operated and repaired to conform to the *ASME Boiler and Pressure Vessel Code, Section VIlI-1971*.

(b) All air compressors, while in operation, shall be under the supervision of a competent employee.

(c) If any defects are found in the air compressors, receiver tank and/or appurtenant equipment, the equipment operator in charge shall be notified immediately and immediate corrective action taken.

(d) The safety pressure relief valve and discharge end of exhaust pipes leading from air compressors shall be located or placed in such a way as to prevent discharge from being released to the atmosphere where injury to any person or property may result.

(e) Safety pressure relief valves shall be inspected at frequent intervals by the equipment operator.

(f) Each air compressor shall be equipped with safety pressure relief valves set at a pressure not to exceed one working pressure of the receiver tank.

(g) Ample lighting shall be provided so that the gauges can be easily read.

(h) Fittings and pipe shall be properly installed and shall be capable of withstanding the discharge pressure of the compressor used.

(i) Emissions discharged from a safety pressure relief valve shall be piped to a place where they will not endanger employees.

(j) There shall be no valve in the discharge opening of a safety pressure relief valve nor in the discharge pipe connected thereto.

(k) The piping connected to the pressure side and discharge side of a safety pressure relief shall not be smaller than the normal pipe size opening.

(l) All air compressors shall have at least one (1) pressure control for proper air flow.

(m) The safety pressure relief valve on main air tank shall be checked periodically and kept in proper working order.

Section 3. Safety Procedures for Safety Pressure Relief Valves, Pumps, Fittings, Piping, Hoses and Pressure Vessels.

(a) All pressure vessels, safety pressure relief valves, pumps, fittings, piping and hoses shall be constructed, installed, operated, inspected and repaired to conform to the *ASME Boi1er and Pressure Vessel Code, Section VIII - 1971*.

(b) All power-driven pumps shall be equipped with a safety pressure relief valve and an operating gauge.

(c) The safety pressure relief valve shall be set to discharge at a pressure not in excess of the established working pressure of the pump, pressure vessel, pipe and fittings.

(d) A guard shall be placed around the shearing pin and spindle of a safety pressure relief valve.

(e) The emissions discharged from a safety pressure relief valve shall be piped to a place where they will not endanger employees.

(f) There shall be no valve between a pump and its safety pressure relief valve.

(g) There shall be no valve in the discharge opening of a safety pressure relief valve nor in the discharge pipe connected thereto.

(h) The piping connected to the pressure side and discharge side of a safety pressure relief valve shall not be smaller than normal pipe size opening of said valve.

(i) The piping on the discharge side of a safety pressure relief valve shall be properly secured.

(j) Clamps and safety cables shall be used to fasten the kelly hose at the standpipe end to the derrick and at the swivel end to the swivel housing.

(k) Discharge hoses under pressure shall be secured by clamps and safety cables or chains.

(1) All discharge lines (pressure lines) shall be placed so as not to be under any mobile equipment nor shall any mobile equipment be placed over any such lines.

(m) Fittings, hoses, pumps, pressure vessels, piping and safety pressure relief valves shall be properly installed and shall be rated to coincide with the discharge pressure of the pressure producing source.

CHAPTER 9

HYDROGEN SULFIDE (H_2S) GAS

Section 1. H_2S Safety Equipment and Procedures.

(a) The following safety equipment shall be provided and operational on site before the well bore is opened that is suspected and/or known to contain H_2S gas.

(i) Each on-duty employee shall wear a calibrated personal H_2S monitor.

(ii) Thirty (30) minute (or greater) Self-Contained Breathing Apparatus (SCBA) especially designed for use in H_2S shall be available on location for each essential personnel for purpose of rescue and abatement of the release.

(iii) Contingency Plan shall be developed and established for each specific site location to include the following:

(A) Emergency response procedures that provide an organized immediate action plan for alerting and protecting operating personnel, contractor personnel, the public and abatement of the release.

(B) Warning System Response. When H2S is detected in excess of 10 ppm, all nonessential personnel shall be moved to a safe area and essential personnel (i.e., those necessary to maintain control of the well, purpose of rescue, and abatement of the release) shall wear SCBA protective breathing equipment to abate or eliminate the release.

(b) The following minimum safety equipment and procedures shall be provided and operational on site when H2S has been detected above 10 PPM on location and personnel must perform continuous work in a H2S environment greater than 10 PPM

(i) Thirty (30) minute (or greater) Self-Contained Breathing Apparatus (SCBA) especially designed for use in H_2S shall be available on location for each essential personnel for purpose of rescue and abatement of the release.

(ii) Fixed H_2S atmospheric monitoring systems shall include visual and audible alarm(s), and shall be set at 10 ppm. H2S monitors shall have one or more sensors located on the rig floor near the wellbore, preferably on the downwind side. Where well fluids are flowed to a surface pit, one or more sensors shall be installed in the area of the surface pit(s). Completion, work-over, and well servicing operations requiring the use of circulation fluids shall include sensors at the return line and above open circulation fluid tanks.

(iii) Supplied Air Respirators (SAR) connected to a cascade system with an

emergency escape cylinder supplying 5 minutes minimum breathing air for each essential personnel.

(iv) Contingency Plan shall be developed and established for each specific site location to include the following:

(A) Emergency response procedures that provide an organized immediate action plan for alerting and protecting operating personnel, contractor personnel, the public and abatement of the release.

(B) Warning System Response. When H2S is detected in excess of 10 ppm, all nonessential personnel shall be moved to a safe area and essential personnel (i.e., those necessary to maintain control of the well, purpose of rescue, and abatement of the release) shall wear SCBA or SAR with cascade system protective breathing equipment.

(b) No employee shall be permitted on location without H_2S safety training, except employees may be permitted on location for H_2S training purposes.

(c) Two (2) means of egress on each location shall be provided.

(d) Two wind socks or streamers must be visible from all points on location.

(e) Signs shall be posted 500 feet from the location, when possible, on each road leading to the location warning of the hazard of H2S.

Section 3. Employee Instructions.

(a) Employees shall be instructed in the use of H_2S safety equipment to be provided on site.

(i) The instruction of personnel shall include, as a minimum, the following elements:

(A) The hazards, characteristics, properties, and exposure symptoms of H_2S and sulfur dioxide (SO_2).

(B) Proper first-aid procedures to be used in a H_2S knock-down.

(C) Use of personal protective equipment.

(D) Use and operation of all H_2S monitoring systems.

(E) Corrective action and shutdown procedures.

(ii) H_2S safety instruction shall be given by a qualified person(s).

(iii) All H_2S safety equipment shall be checked to assure readiness at least daily.

(iv) All monitoring equipment shall be calibrated by manufacturer's recommendations and by qualified individuals.

CHAPTER ~~9~~ 10

ACQUISITION OF REFERENCED STANDARDS

Section 1. Standards Producing Organizations.

(a) The National Consensus Standards defined in Chapter I of these rules and regulations may be obtained from the organizations listed below:

(i) *American National Standards Institute (ANSI)*; 11 West 42nd Street; New York, NY. 10036.

(ii) *American Society of Mechanical Engineers (ASME)*; United Engineering Center; 345 E. 47th St.; New York, NY 10017.

(iii) *Society of Automotive Engineers, Inc. (SAE)*; 485 Lexington Avenue; New York, NY 10017.

(iv) *Institute of Makers of Explosives (IME)*; 420 Lexington Ave.; New York, NY 10022.

(v) *American Welding Society (AWS)*; 550 NW LeJuene Road, PO Box 351040, Miami, FL 33135.

(vi) *American Petroleum Institute (API) 1220 L Street, N.W., Washington, D.C. 20005.*

Section 2. Sources of Rules and Regulations.

(a) These rules and regulations have been compiled utilizing excerpts from and references to the following sources:

(i) *ANSI A11.1-1970 Practice for Industrial Lighting.*

(ii) *ANSI B31.1.0-1967 Power Piping.*

(iii) *ANSI C1(Rev. of 1971) National Electrical Code.*

(iv) *AWS D1.0-66 Welding in Building Construction.*

(v) *ANSI Z21.30-1964 Installation of Gas Appliances and Gas Piping.*

(vi) *ASME Boiler and Pressure Vessel Code (1971).*

(vii) *NFPA No. 30 (1972) Flammable and Combustible Liquids Code.*

(viii) *API Recommended Practice 49 Recommended Practice for Drilling and Well Servicing Operations involving Hydrogen Sulfide, current edition.*

(ix) API Recommended Practices 54 Recommended Practices for Occupational Safety for Oil and Gas Drilling and Servicing Operations, current edition.